Lecture 10: Recurrent Neural Networks

Administrative

A1 regrade deadline is tonight

A2 due yesterday

Redeem your Google Cloud coupons by Sunday 5/6

Administrative: Midterm

In-class midterm on Tuesday!
Details on Piazza

If you need an alternate exam time then let us know by tomorrow

Midterm review session tomorrow

Last Time: CNN Architectures

AlexNet

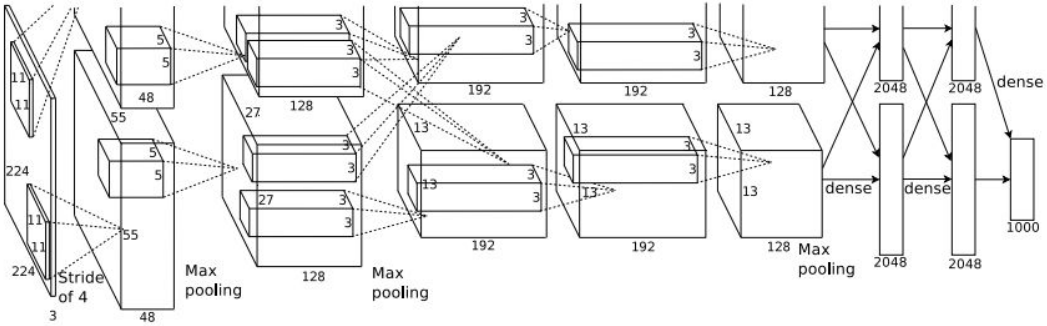

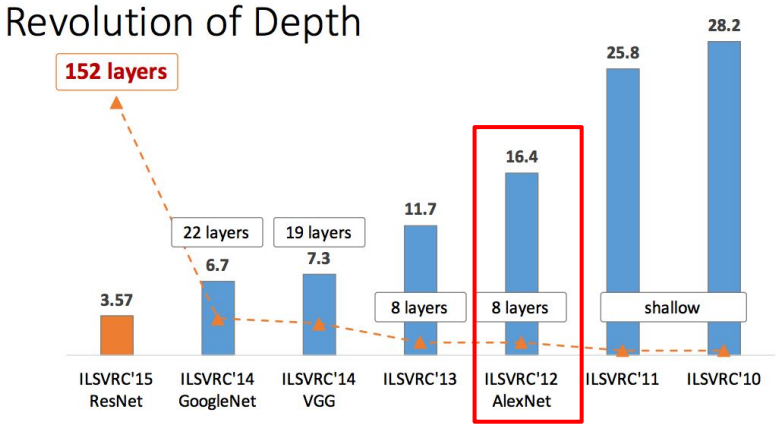

Figure copyright Kaiming He, 2016. Reproduced with permission.

Last Time: CNN Architectures

VGG16

VGG19

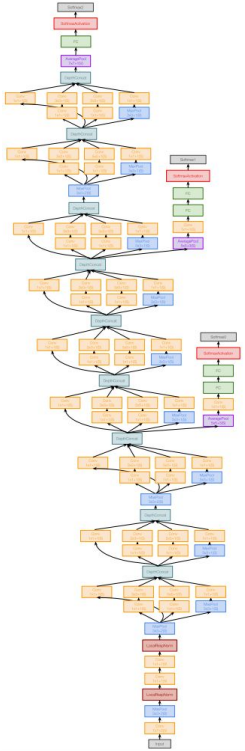

GoogLeNet

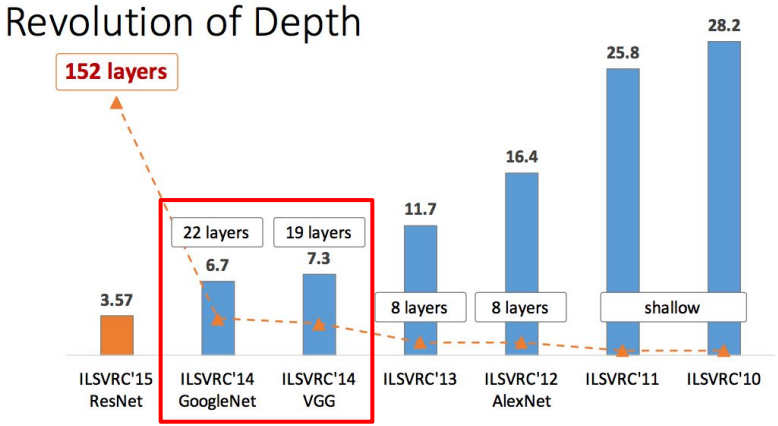

Figure copyright Kaiming He, 2016. Reproduced with permission.

Last Time: CNN Architectures

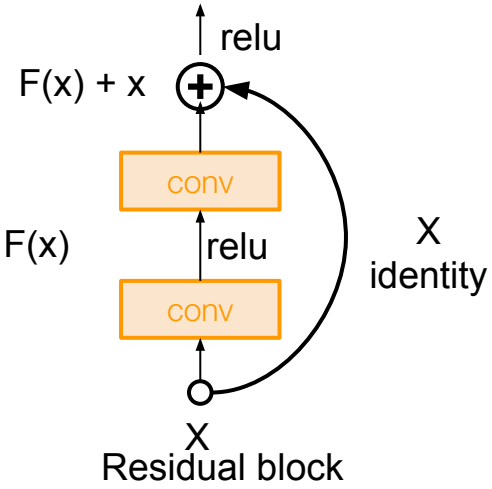

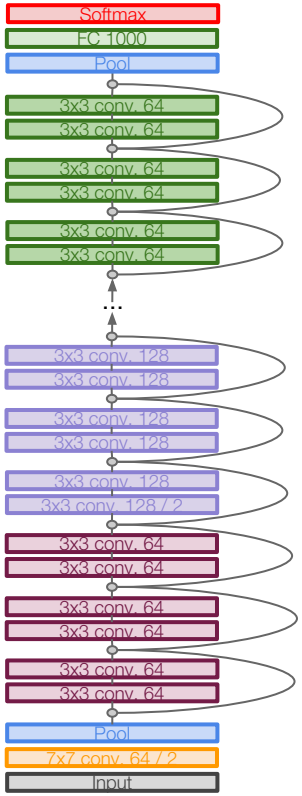

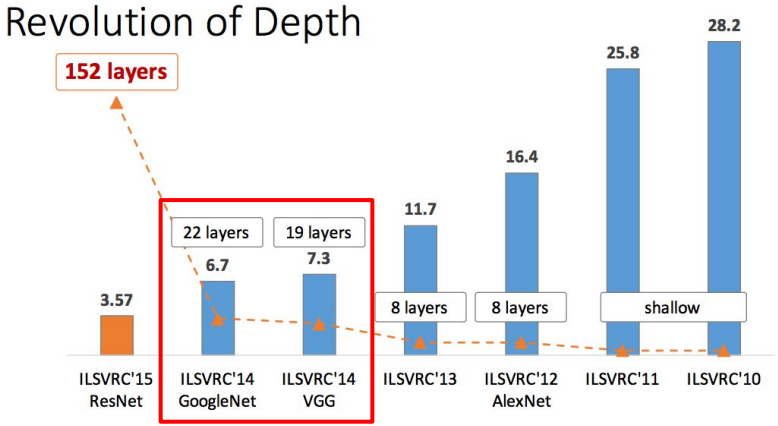

Figure copyright Kaiming He, 2016. Reproduced with permission.

DenseNet

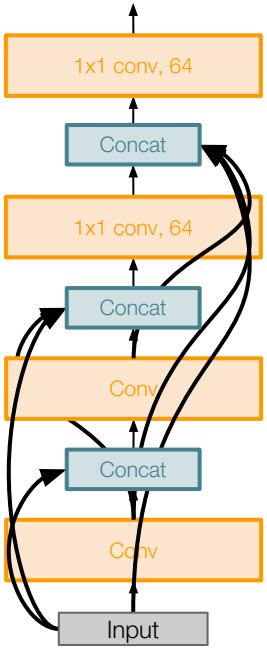

Dense Block

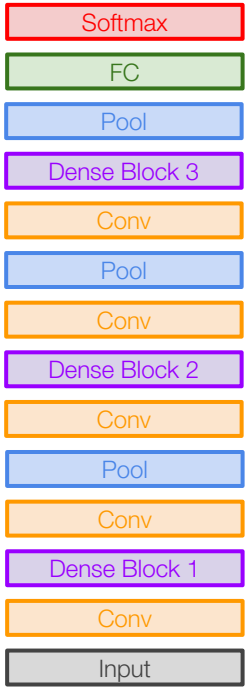

FractalNet

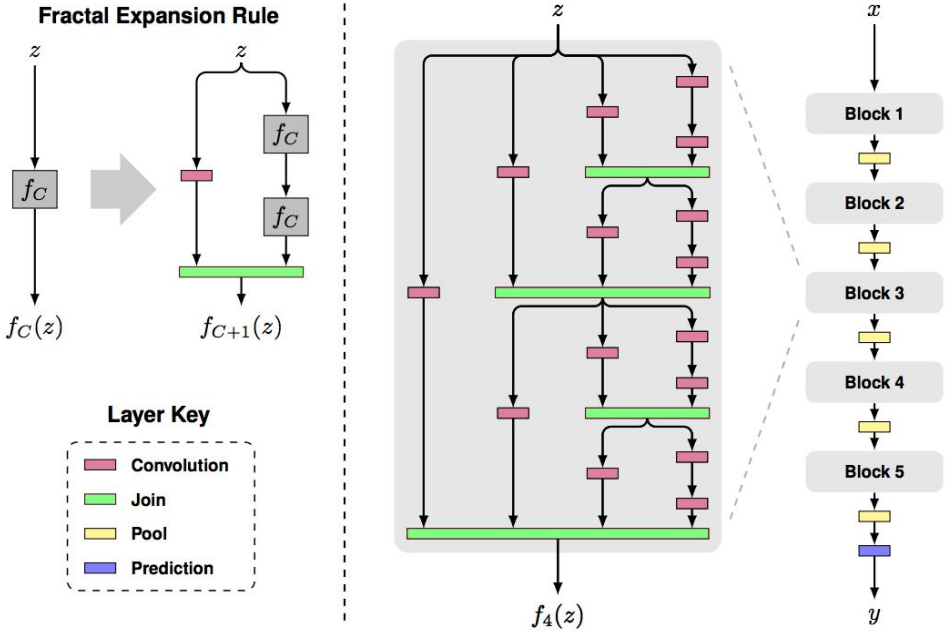

Last Time: CNN Architectures

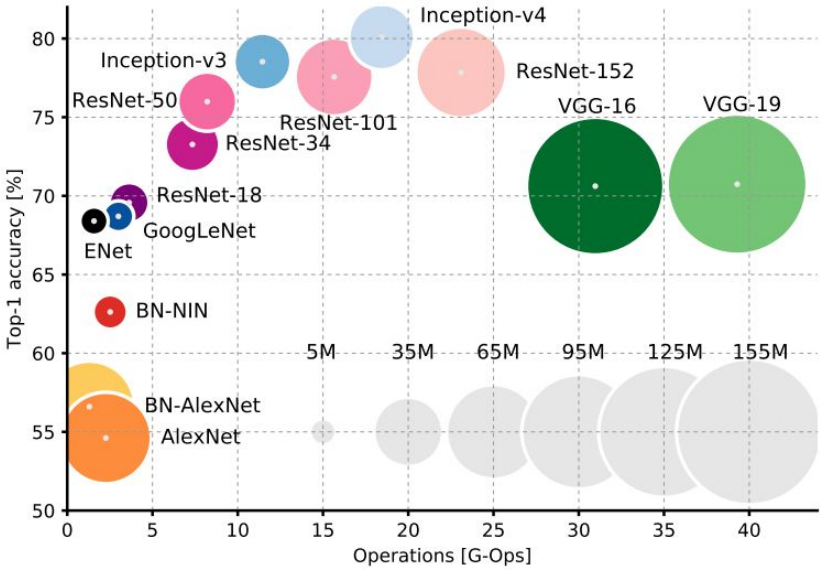

Last Time: CNN Architectures

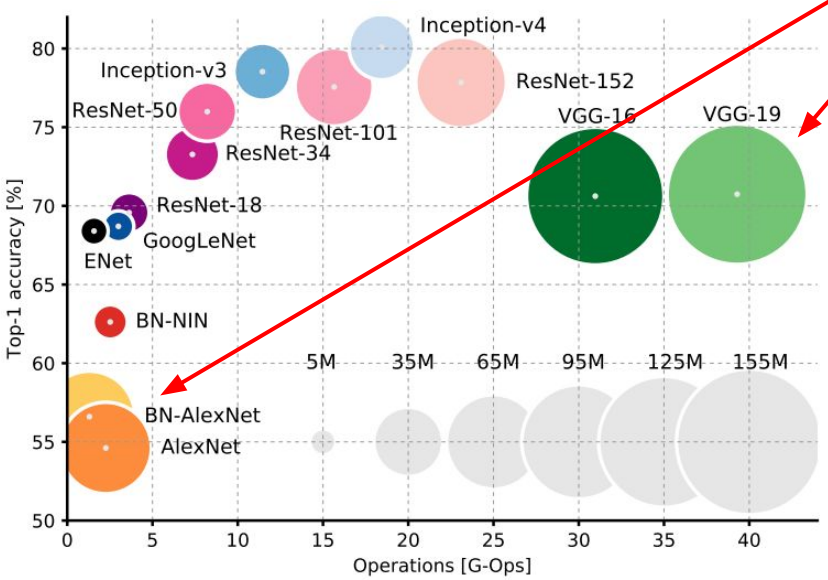

AlexNet and VGG have tons of parameters in the fully connected layers

AlexNet: ~62M parameters

FC6: 256x6x6 -> 4096: 38M params
FC7: 4096 -> 4096: 17M params
FC8: 4096 -> 1000: 4M params
~59M params in FC layers!

ImageNet pretraining -> Instagram pretraining

Bigger models are saturated on ImageNet, but with more data bigger models do better

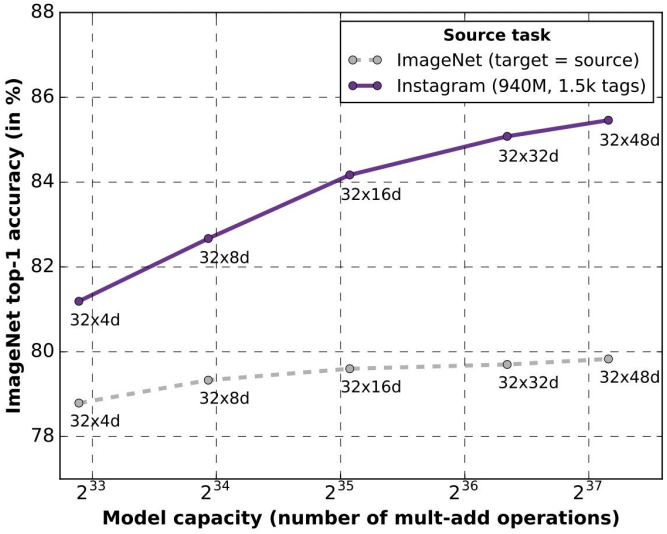

Biggest network was pretrained on 3.5B Instagram images

Trained on 336 GPUs for 22 days

Mahajan et al, “Exploring the Limits of Weakly Supervised Pretraining”, arXiv 2018

ImageNet pretraining -> Instagram pretraining

Bigger models are saturated on ImageNet, but with more data bigger models do better

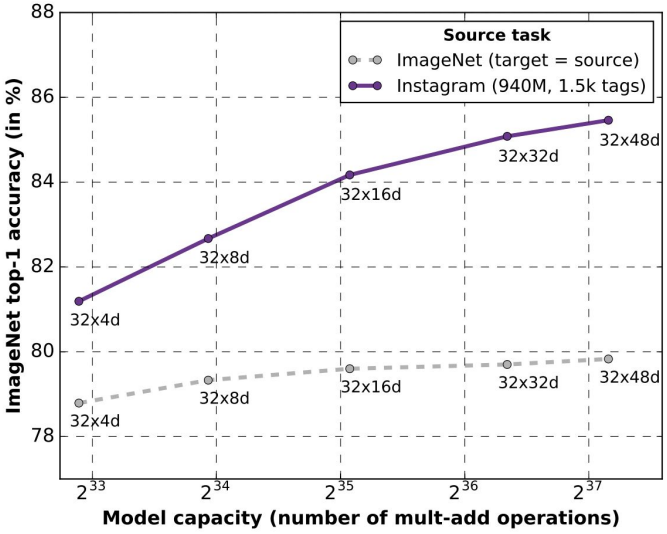

Biggest network was pretrained on 3.5B Instagram images

Trained on 336 GPUs for 22 days
≈ $129,000 on Google Cloud

Mahajan et al, “Exploring the Limits of Weakly Supervised Pretraining”, arXiv 2018

Today: Recurrent Neural Networks

“Vanilla” Neural Network

one to one

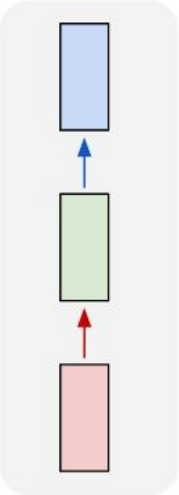

Vanilla Neural Networks

Recurrent Neural Networks: Process Sequences

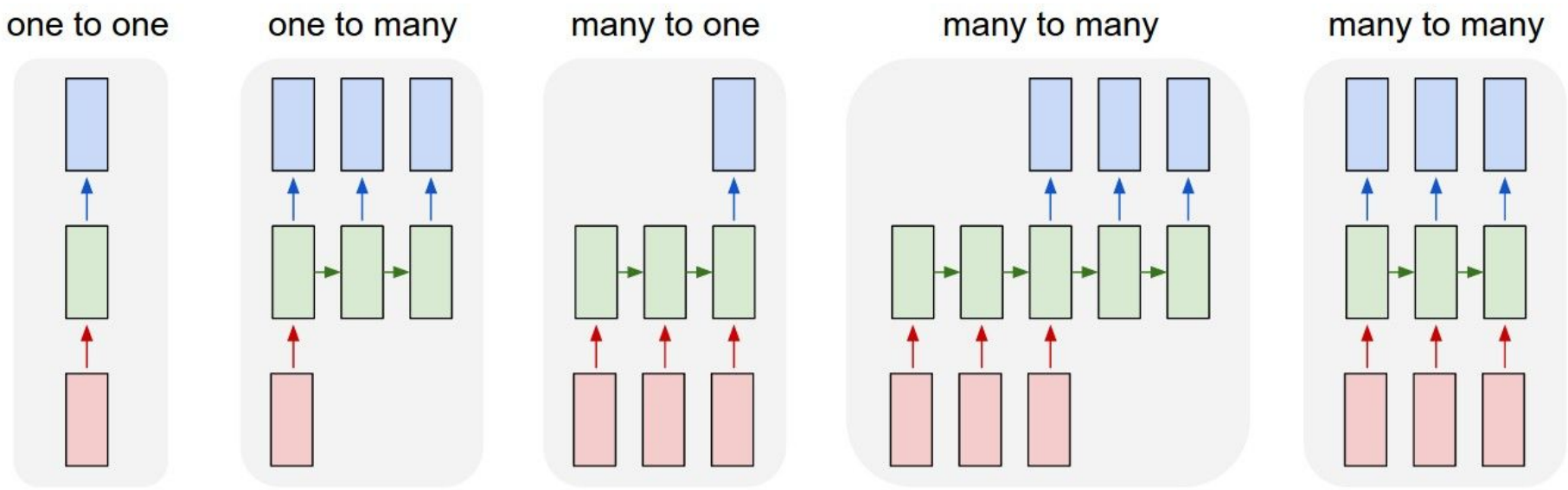

e.g. **Image Captioning**
image -> sequence of words

Recurrent Neural Networks: Process Sequences

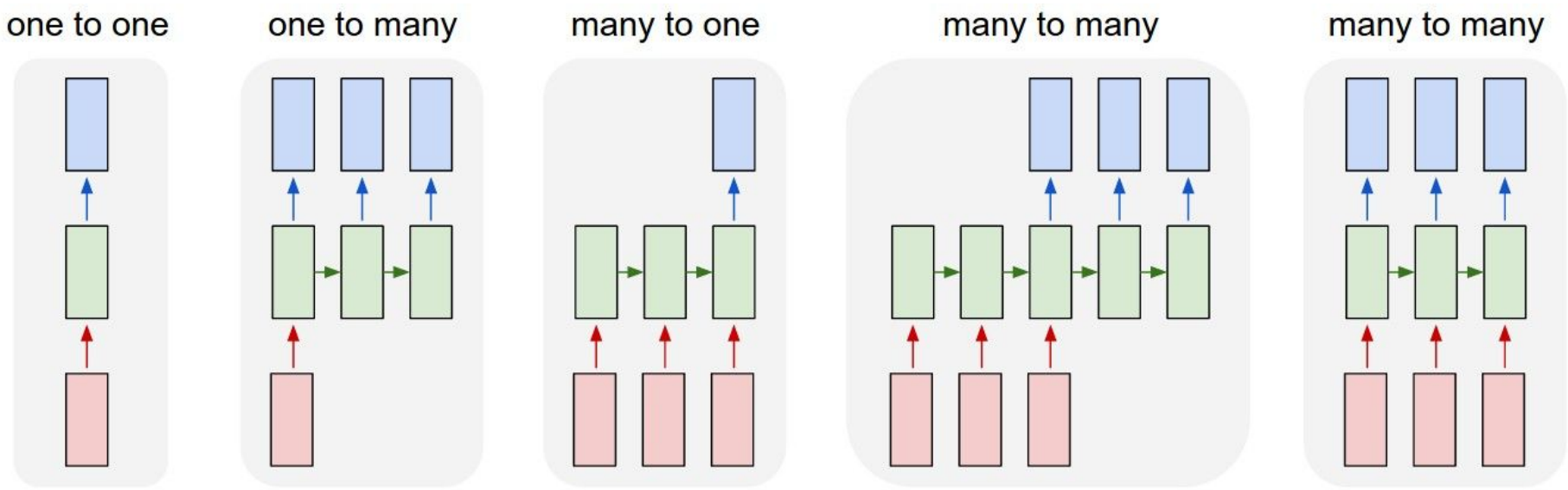

e.g. **Sentiment Classification**
sequence of words -> sentiment

Recurrent Neural Networks: Process Sequences

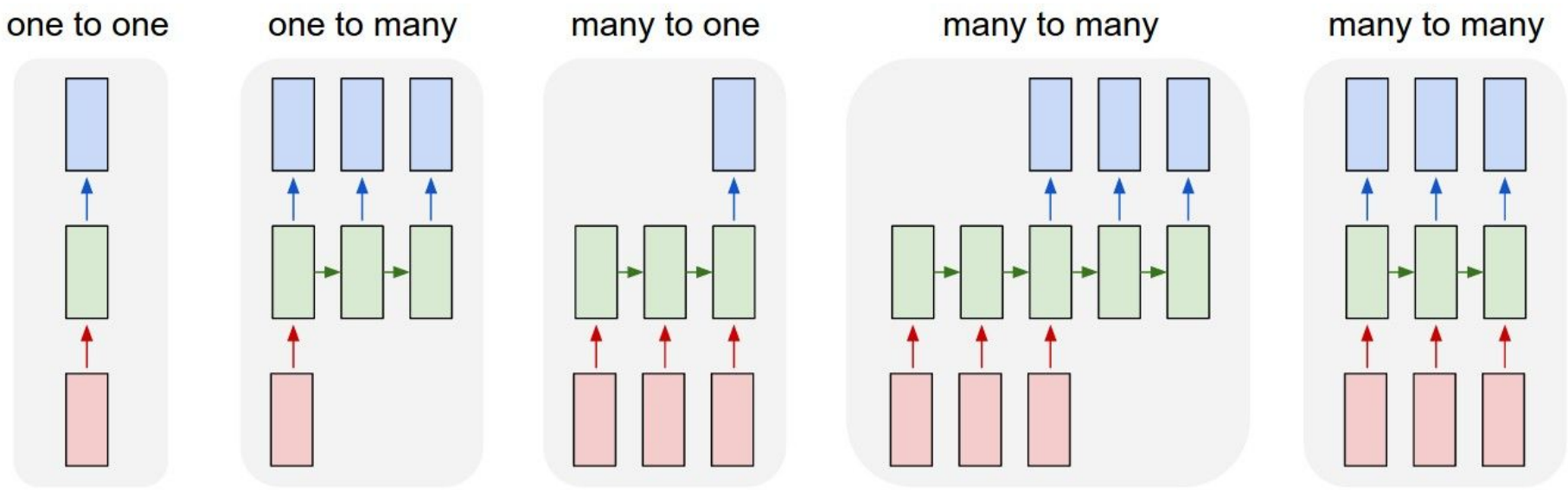

e.g. **Machine Translation**
seq of words -> seq of words

Recurrent Neural Networks: Process Sequences

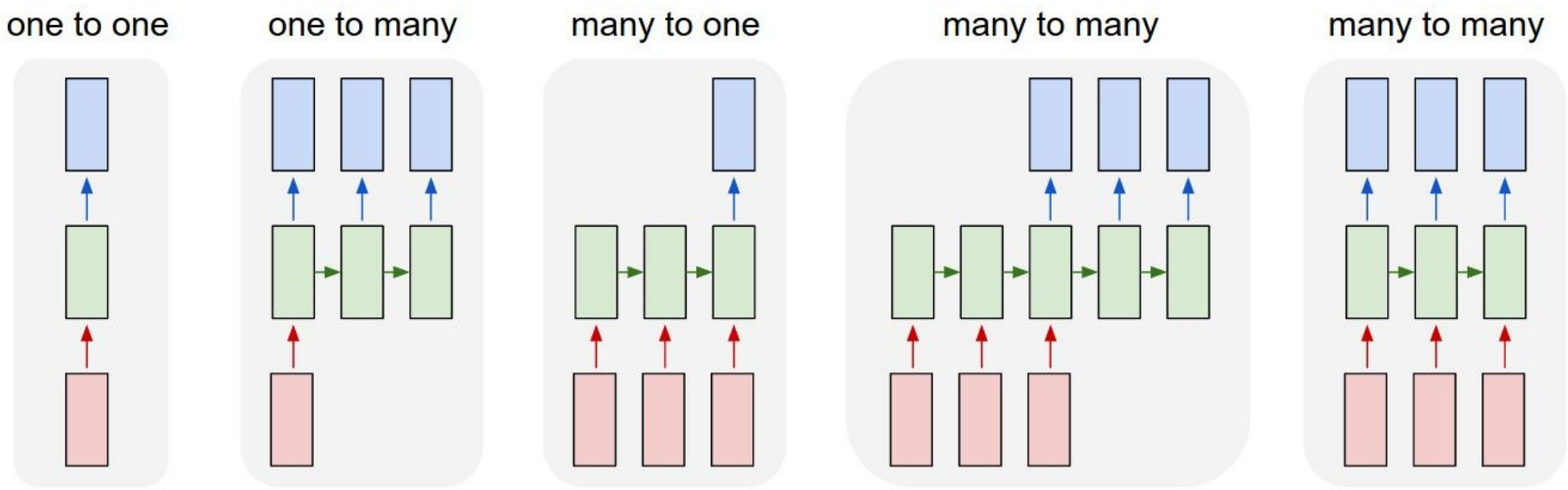

e.g. **Video classification on frame level**

Sequential Processing of Non-Sequence Data

Classify images by taking a series of “glimpses”

Ba, Mnih, and Kavukcuoglu, “Multiple Object Recognition with Visual Attention”, ICLR 2015.
Gregor et al, “DRAW: A Recurrent Neural Network For Image Generation”, ICML 2015
Figure copyright Karol Gregor, Ivo Danihelka, Alex Graves, Danilo Jimenez Rezende, and Daan Wierstra, 2015. Reproduced with permission.

Sequential Processing of Non-Sequence Data

Generate images one piece at a time!

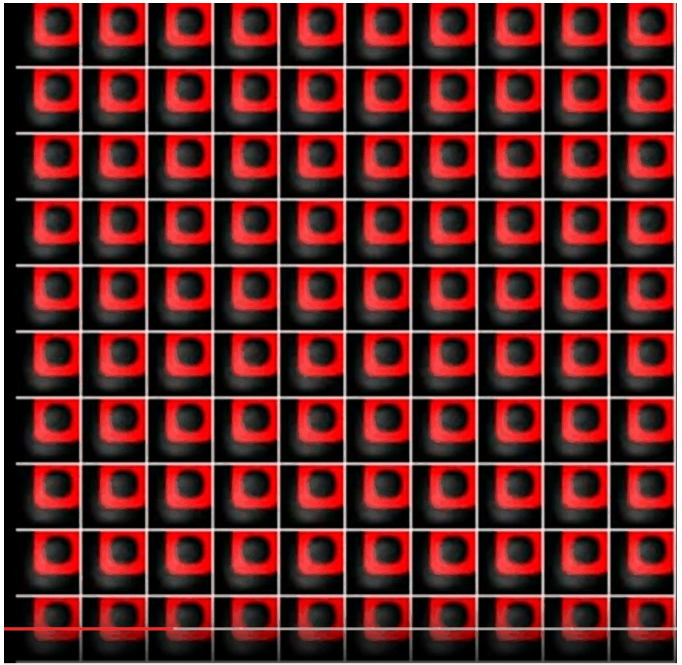

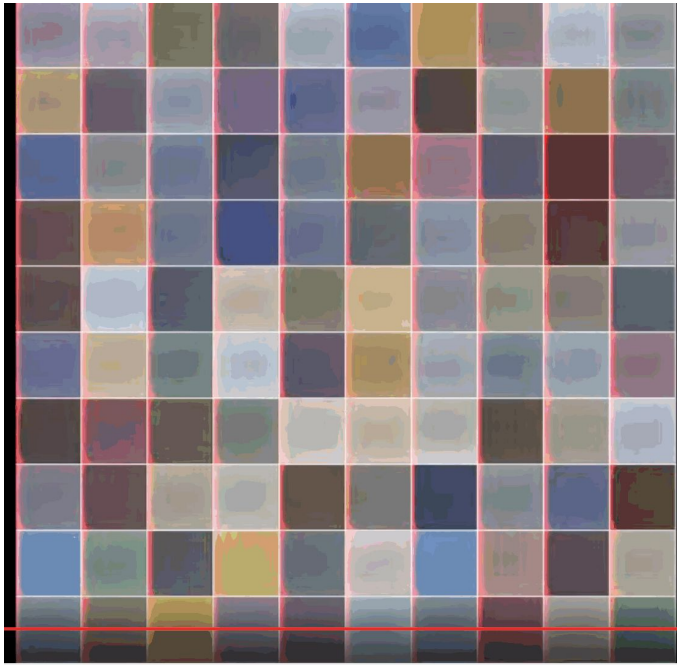

Gregor et al, "DRAW: A Recurrent Neural Network For Image Generation", ICML 2015
Figure copyright Karol Gregor, Ivo Danihelka, Alex Graves, Danilo Jimenez Rezende, and Daan Wierstra, 2015. Reproduced with permission.

Recurrent Neural Network

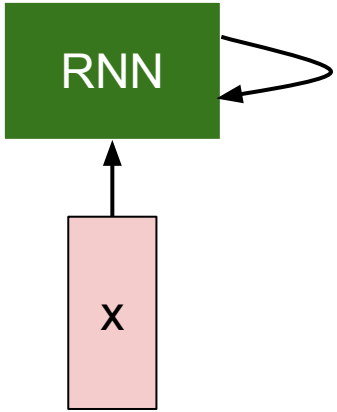

Recurrent Neural Network

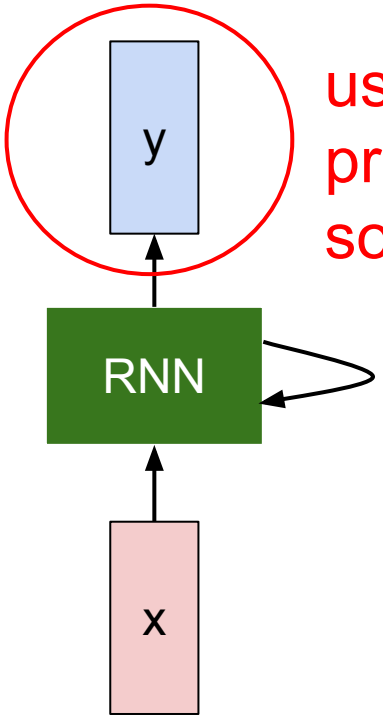

usually want to predict a vector at some time steps

Recurrent Neural Network

We can process a sequence of vectors **x** by applying a **recurrence formula** at every time step:

$$\boxed{h_t} = \boxed{f_W}(\boxed{h_{t-1}}, \boxed{x_t})$$

new state

old state

input vector at some time step

some function with parameters W

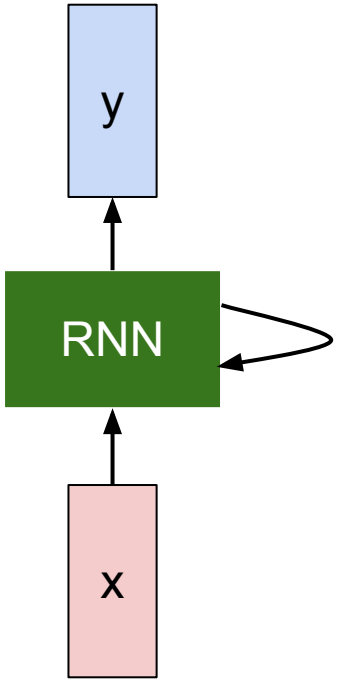

Recurrent Neural Network

We can process a sequence of vectors **x** by applying a **recurrence formula** at every time step:

$$h_t = f_W(h_{t-1}, x_t)$$

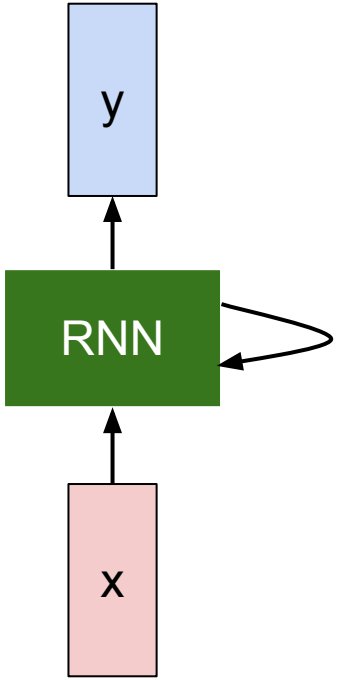

Notice: the same function and the same set of parameters are used at every time step.

(Simple) Recurrent Neural Network

The state consists of a single *"hidden"* vector **h**:

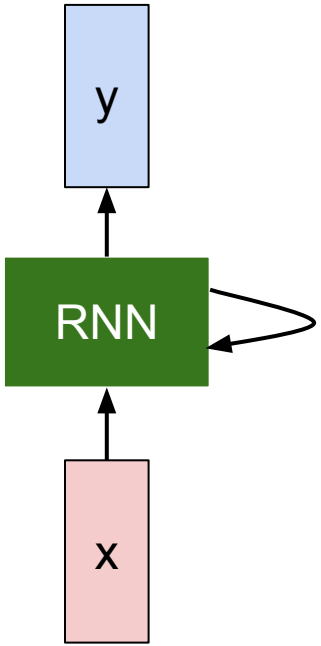

$$h_t = f_W(h_{t-1}, x_t)$$

$$h_t = \tanh(W_{hh}h_{t-1} + W_{xh}x_t)$$

$$y_t = W_{hy}h_t$$

Sometimes called a "Vanilla RNN" or an "Elman RNN" after Prof. Jeffrey Elman

RNN: Computational Graph

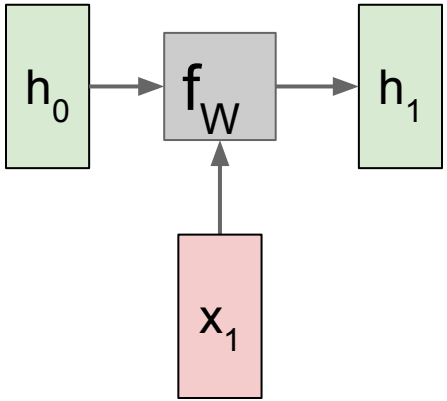

RNN: Computational Graph

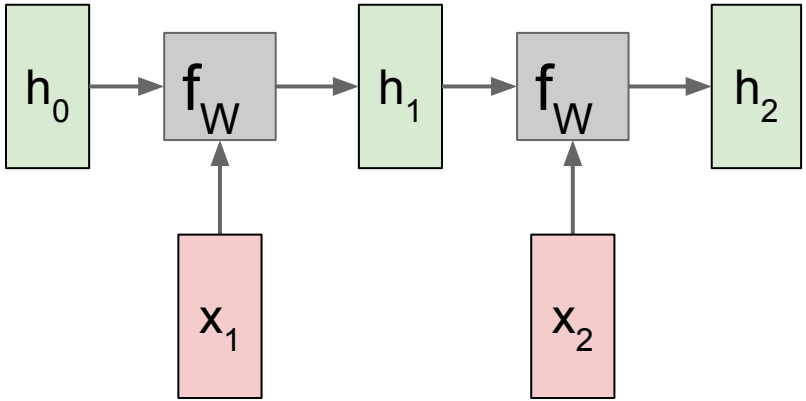

RNN: Computational Graph

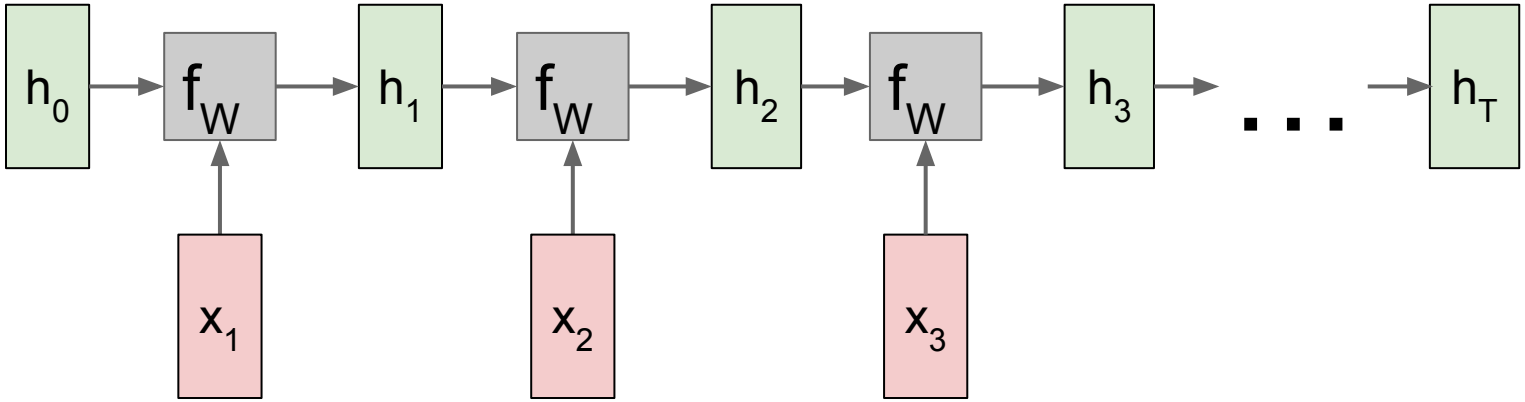

RNN: Computational Graph

Re-use the same weight matrix at every time-step

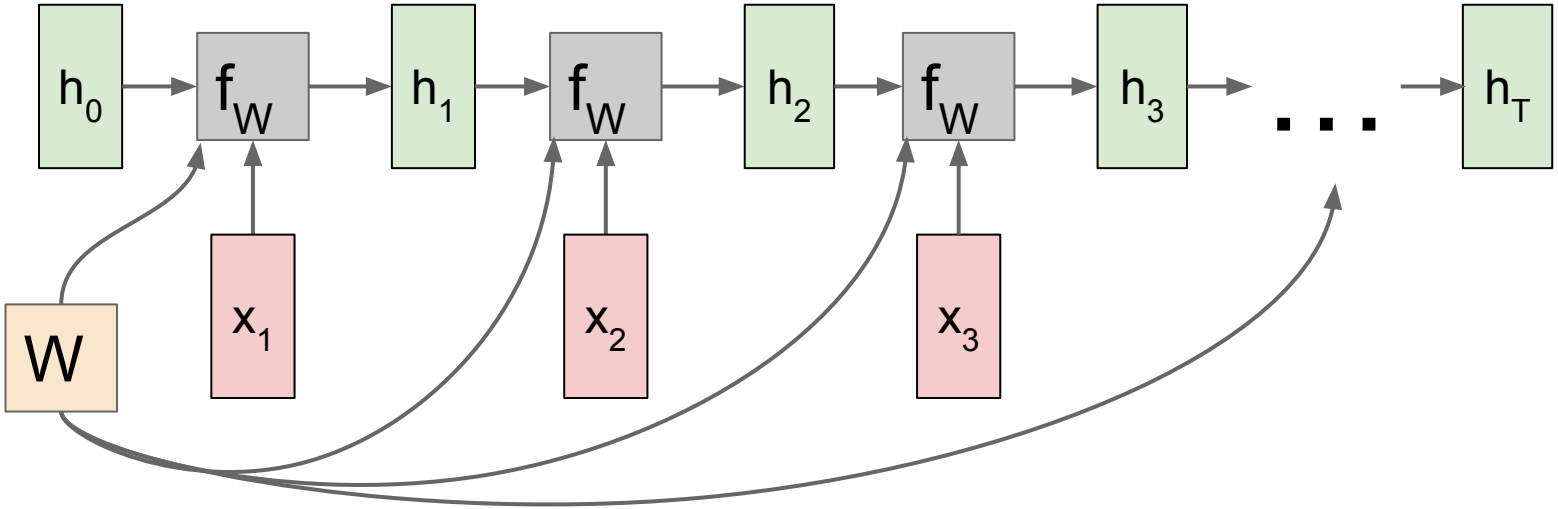

RNN: Computational Graph: Many to Many

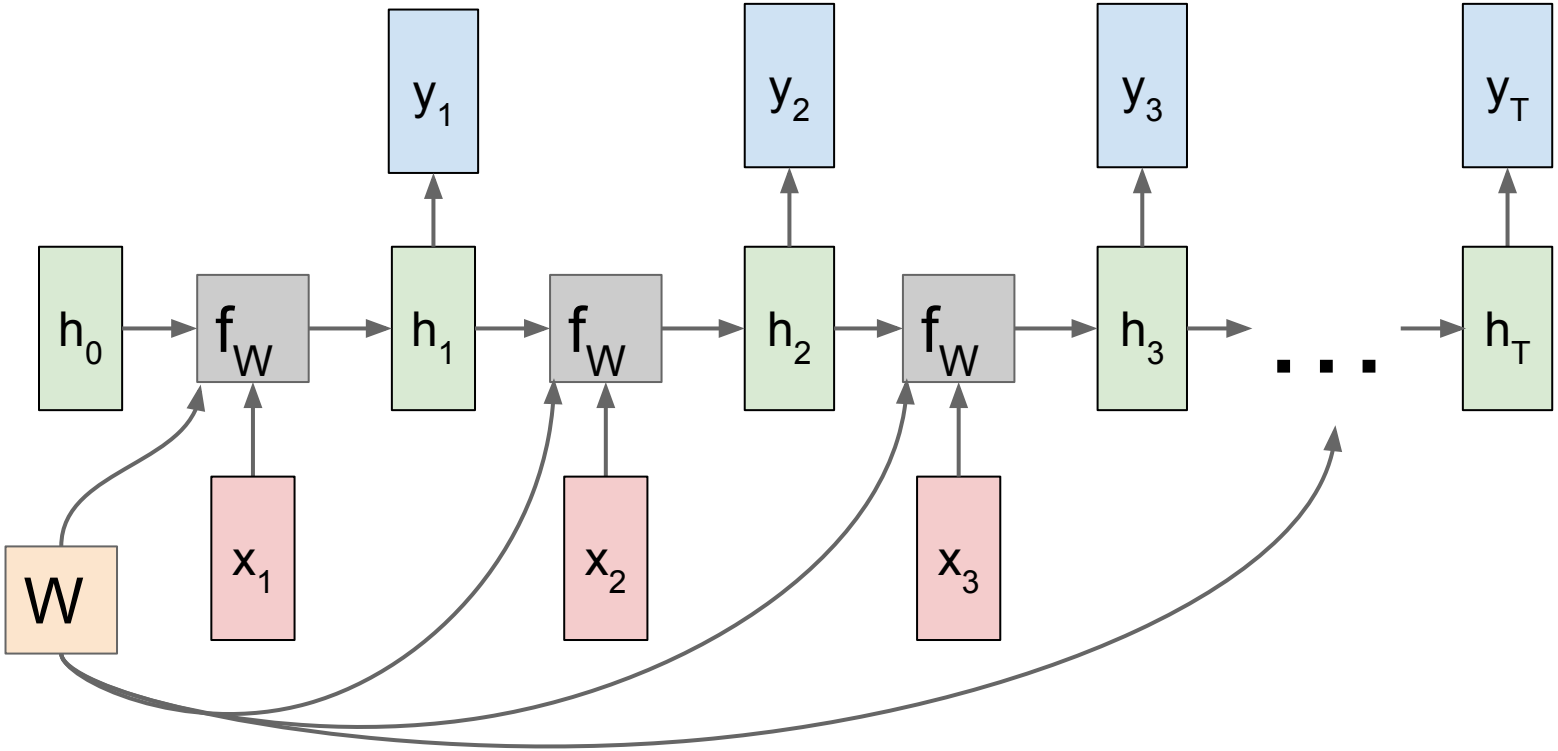

RNN: Computational Graph: Many to Many

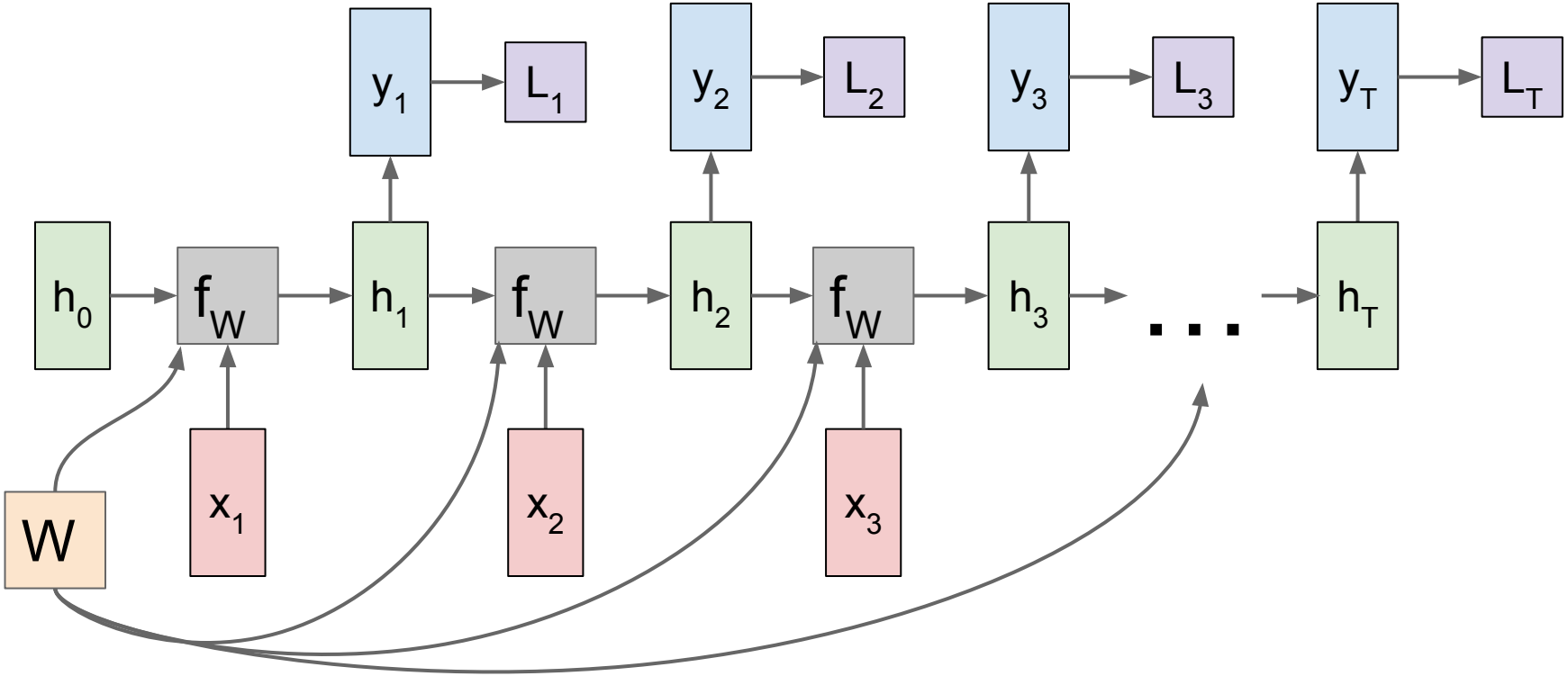

RNN: Computational Graph: Many to Many

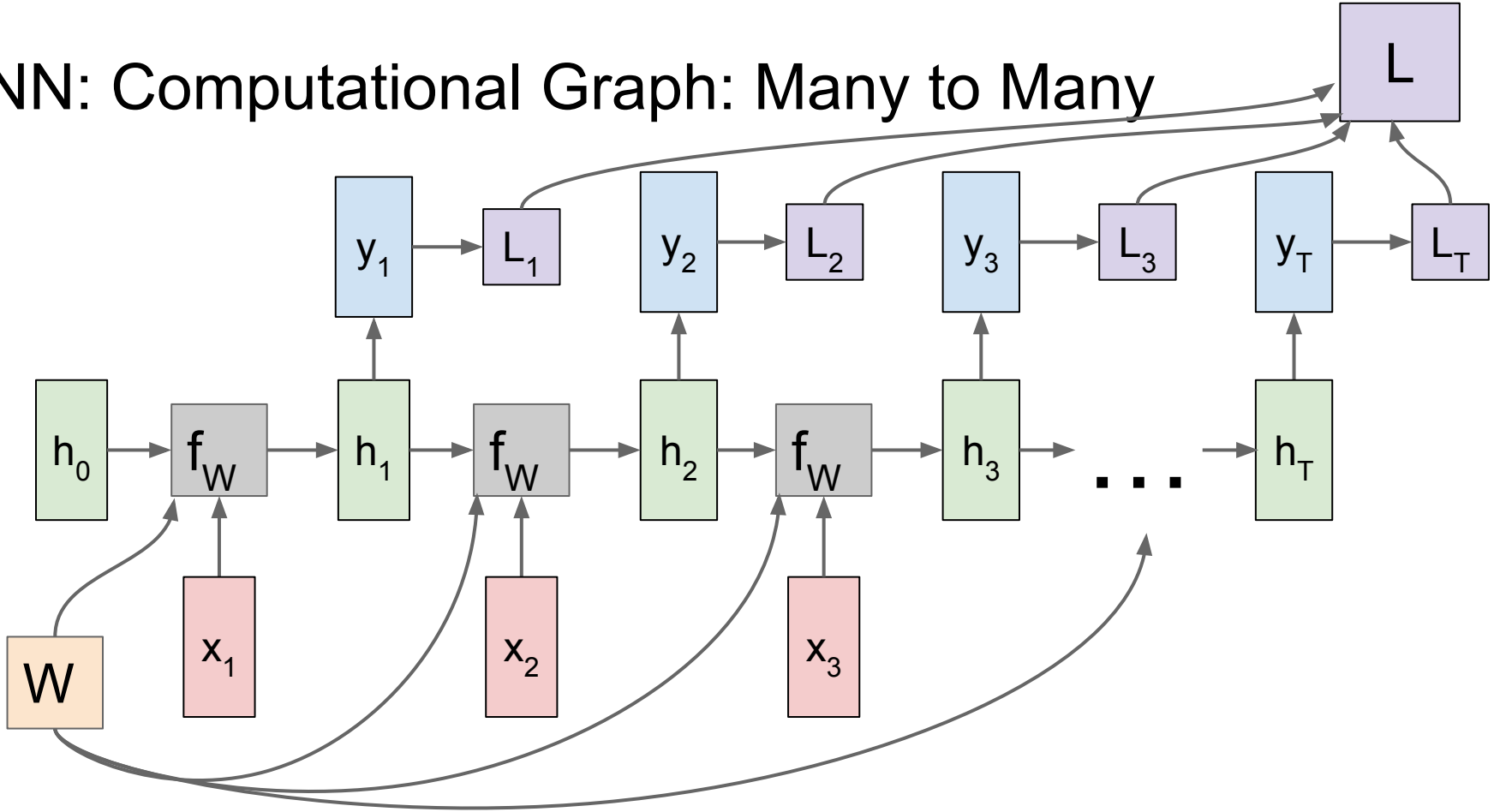

RNN: Computational Graph: Many to One

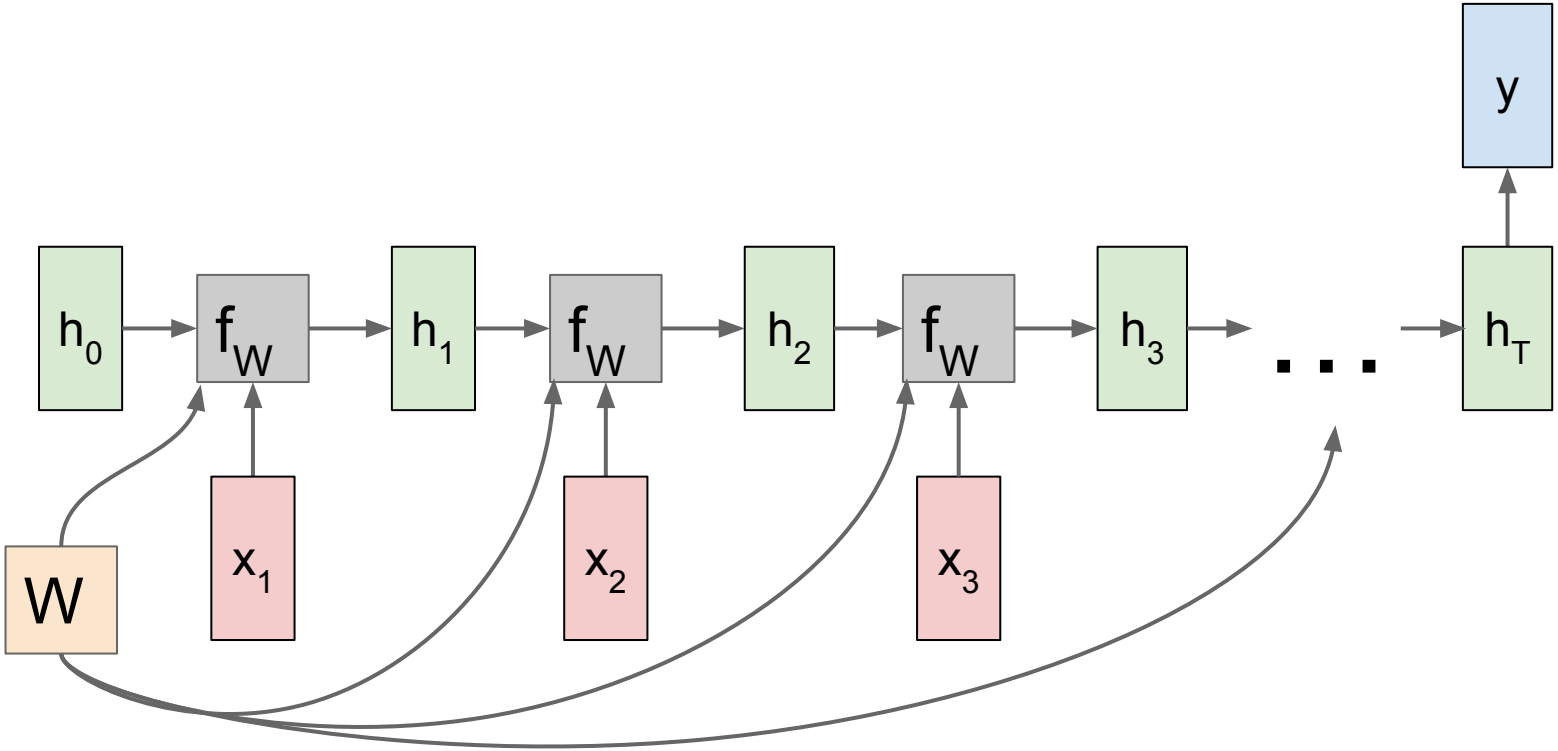

RNN: Computational Graph: One to Many

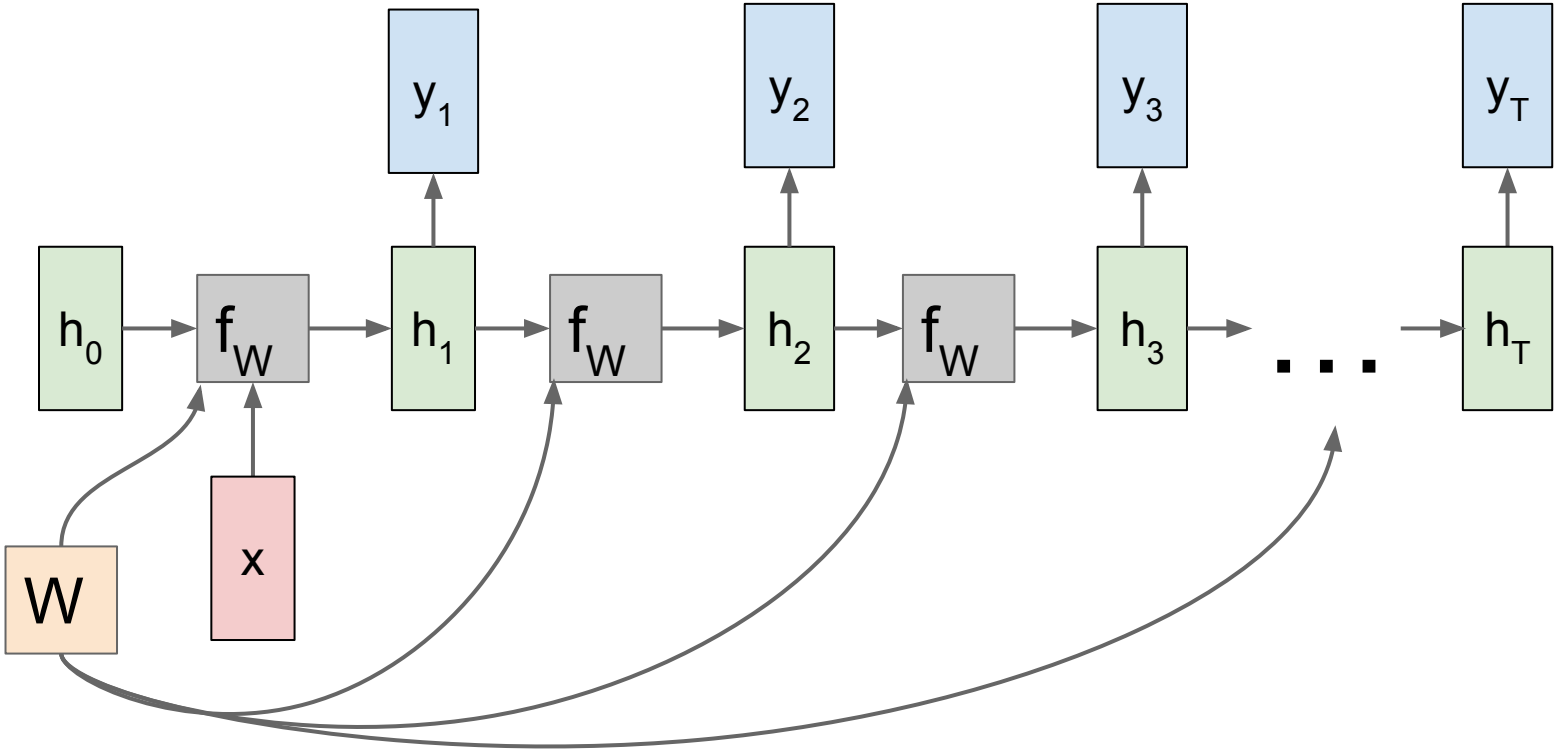

Sequence to Sequence: Many-to-one + one-to-many

Many to one: Encode input sequence in a single vector

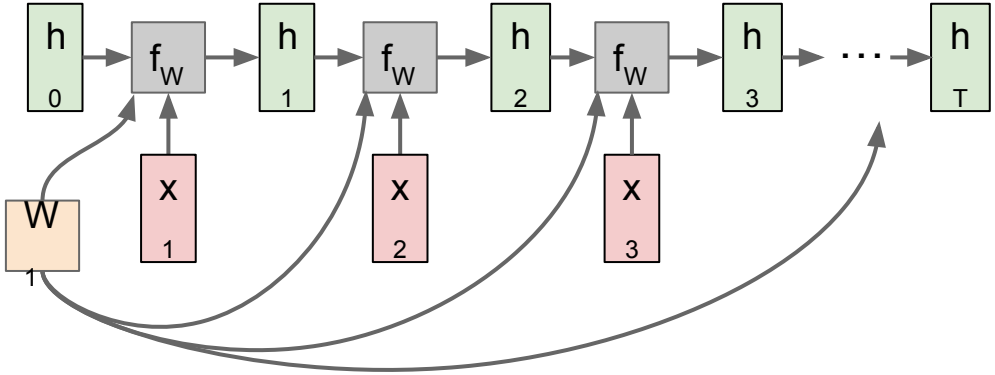

Sutskever et al, “Sequence to Sequence Learning with Neural Networks”, NIPS 2014

Sequence to Sequence: Many-to-one + one-to-many

One to many: Produce output sequence from single input vector

Many to one: Encode input sequence in a single vector

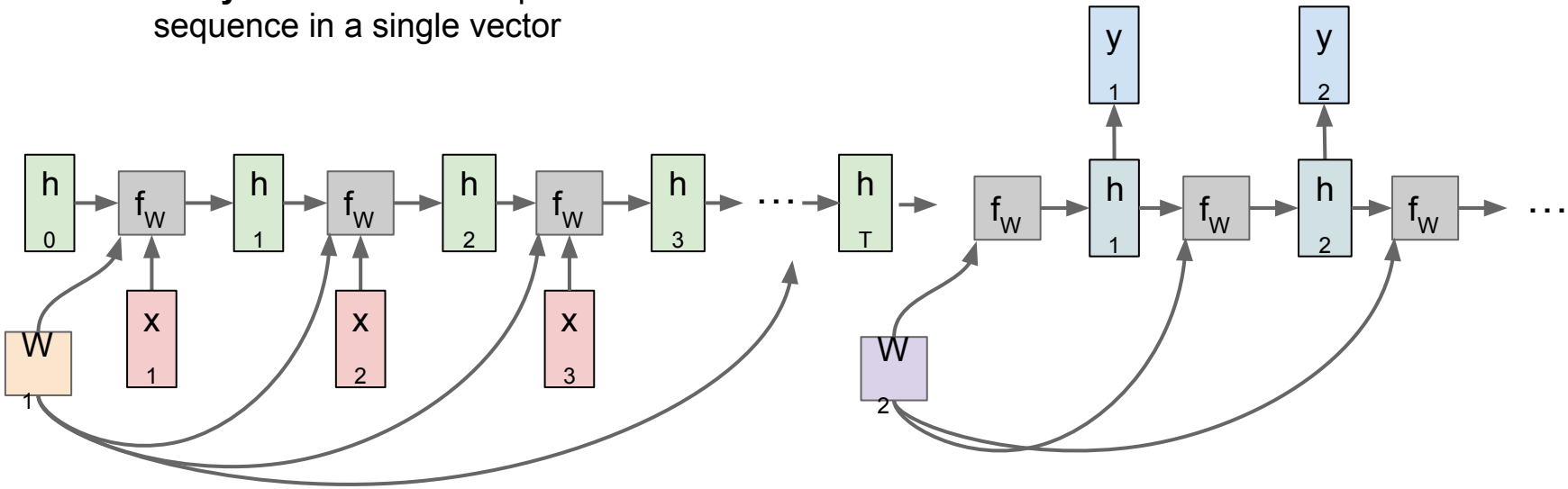

Sutskever et al, “Sequence to Sequence Learning with Neural Networks”, NIPS 2014

Example: Character-level Language Model

Vocabulary:
[h,e,l,o]

Example training sequence:
“hello”

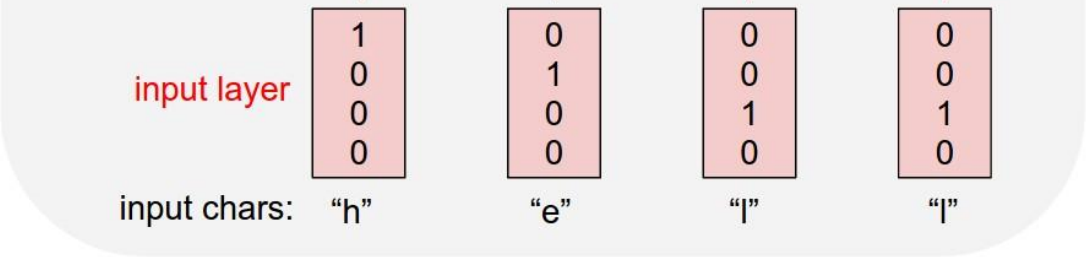

Example: Character-level Language Model

$$h_t = \tanh(W_{hh} h_{t-1} + W_{xh} x_t)$$

Vocabulary:
[h,e,l,o]

Example training sequence:
“hello”

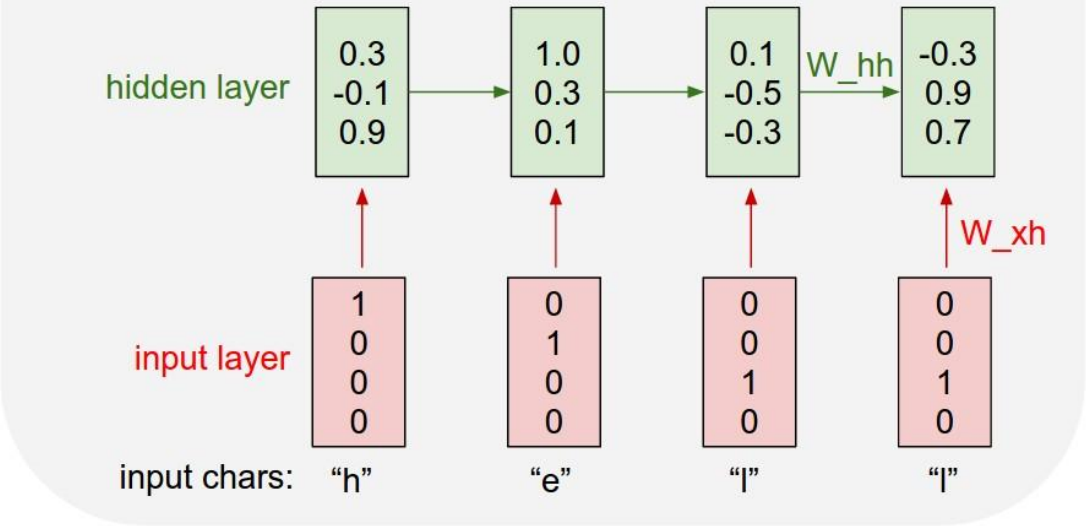

Example: Character-level Language Model

Vocabulary:
[h,e,l,o]

Example training sequence:
“hello”

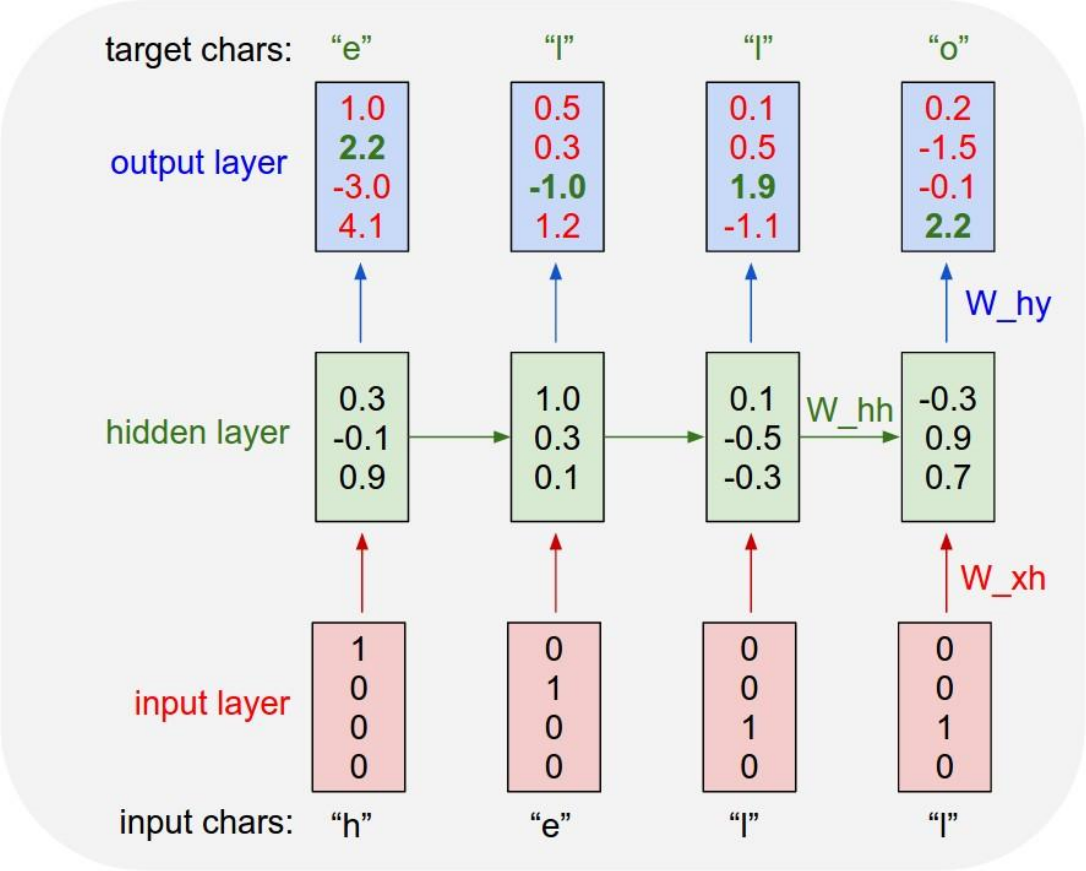

Example: Character-level Language Model Sampling

Vocabulary:
[h,e,l,o]

At test-time sample characters one at a time, feed back to model

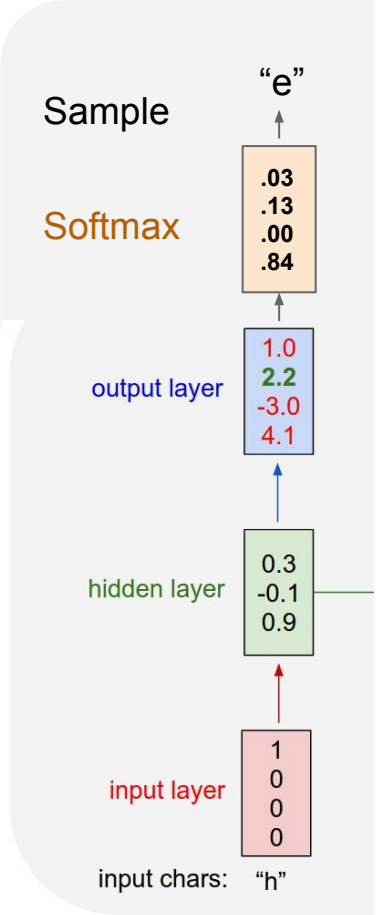

Example: Character-level Language Model Sampling

Vocabulary:
[h,e,l,o]

At test-time sample characters one at a time, feed back to model

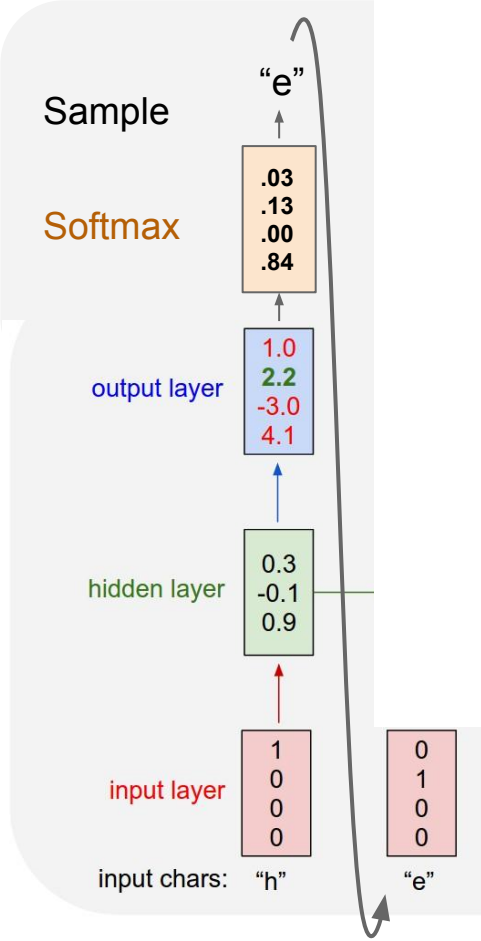

Example: Character-level Language Model Sampling

Vocabulary:
[h,e,l,o]

At test-time sample characters one at a time, feed back to model

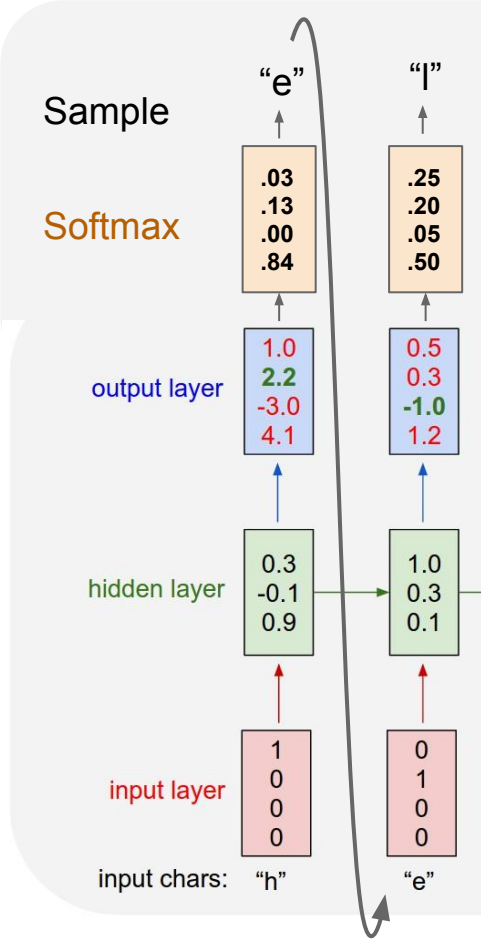

Example: Character-level Language Model Sampling

Vocabulary:
[h,e,l,o]

At test-time sample characters one at a time, feed back to model

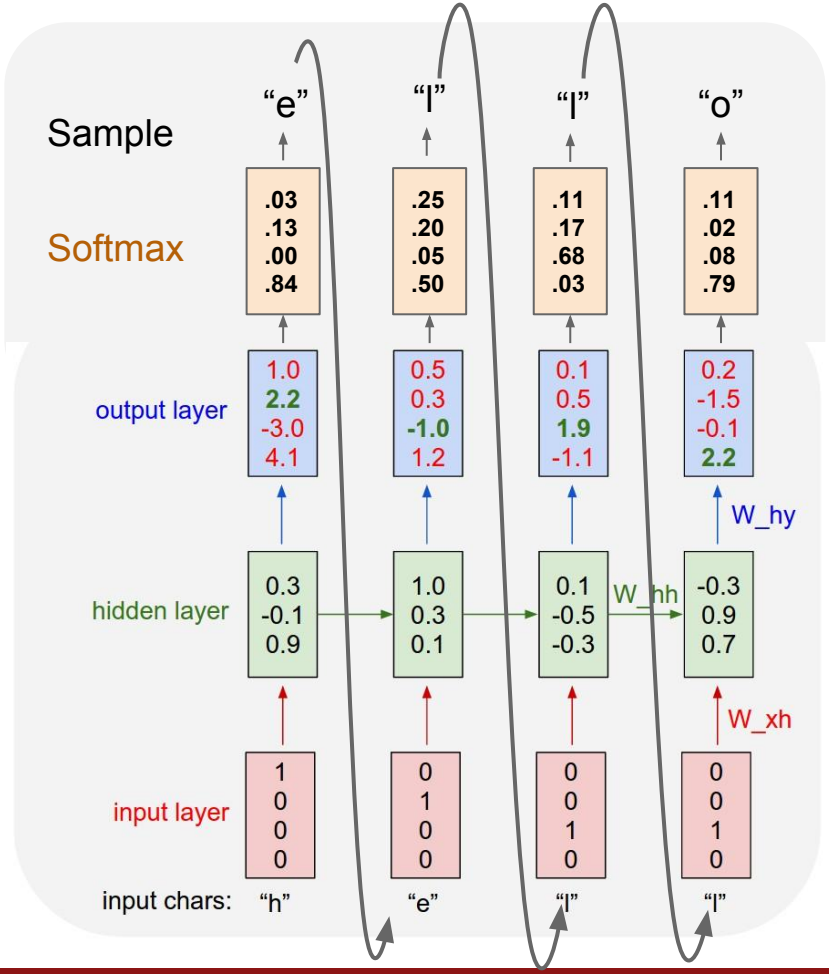

Backpropagation through time

Forward through entire sequence to compute loss, then backward through entire sequence to compute gradient

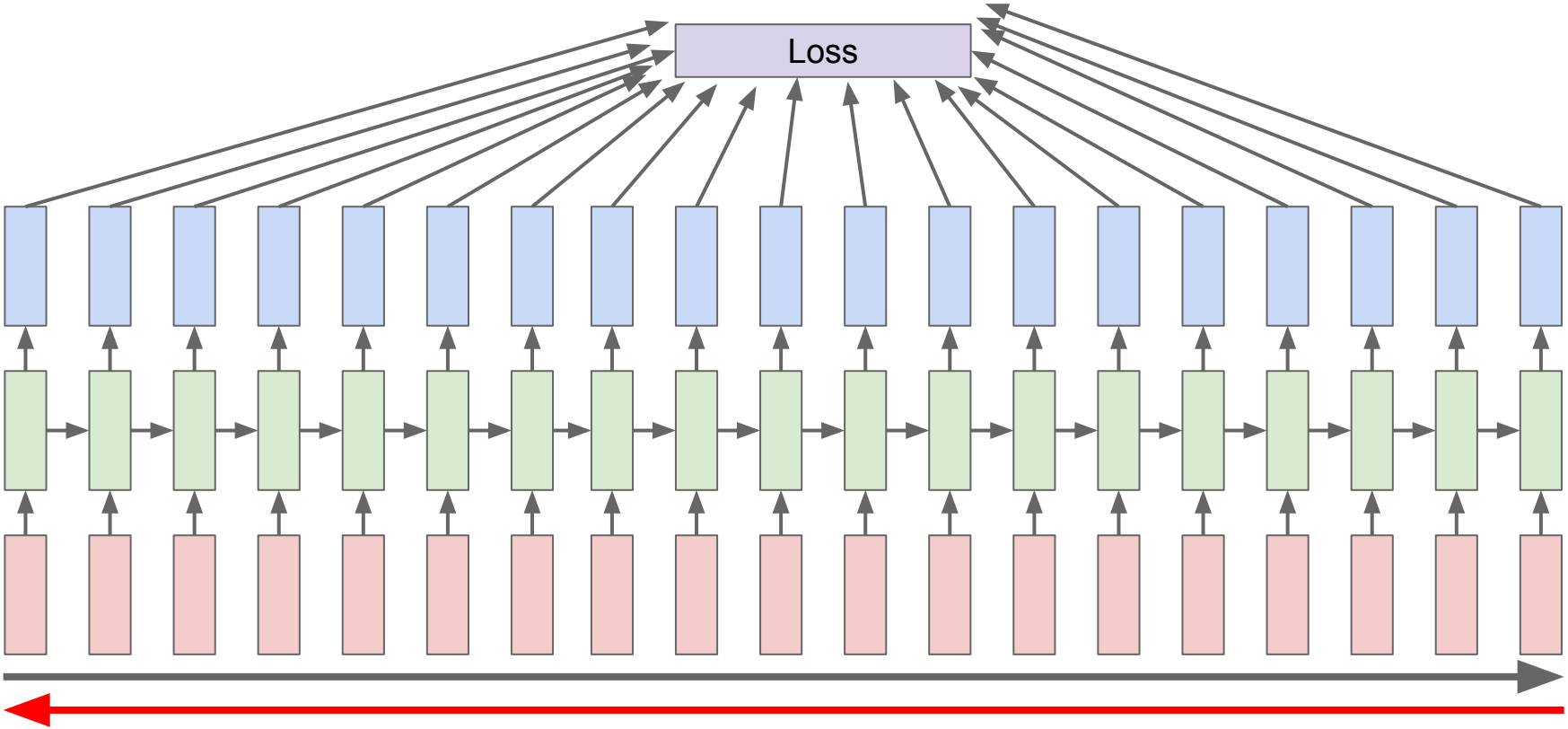

Truncated Backpropagation through time

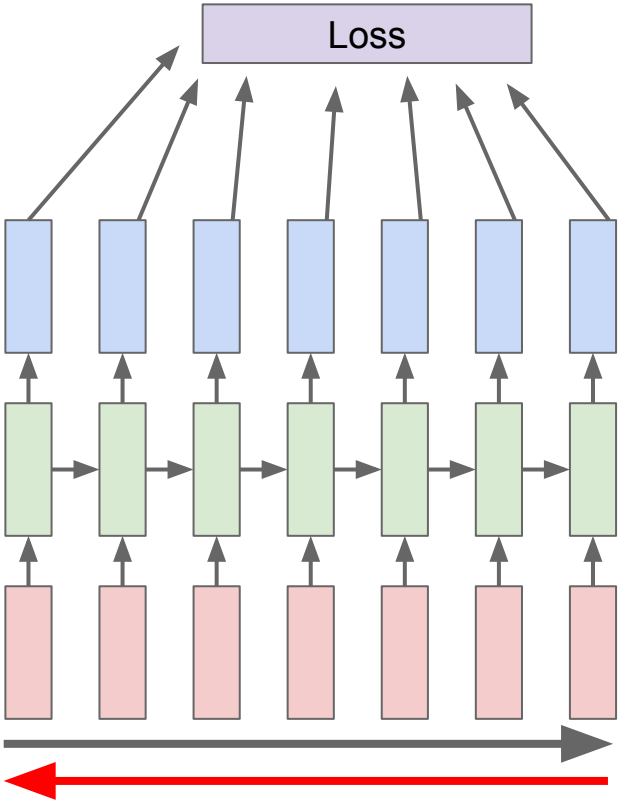

Run forward and backward through chunks of the sequence instead of whole sequence

Truncated Backpropagation through time

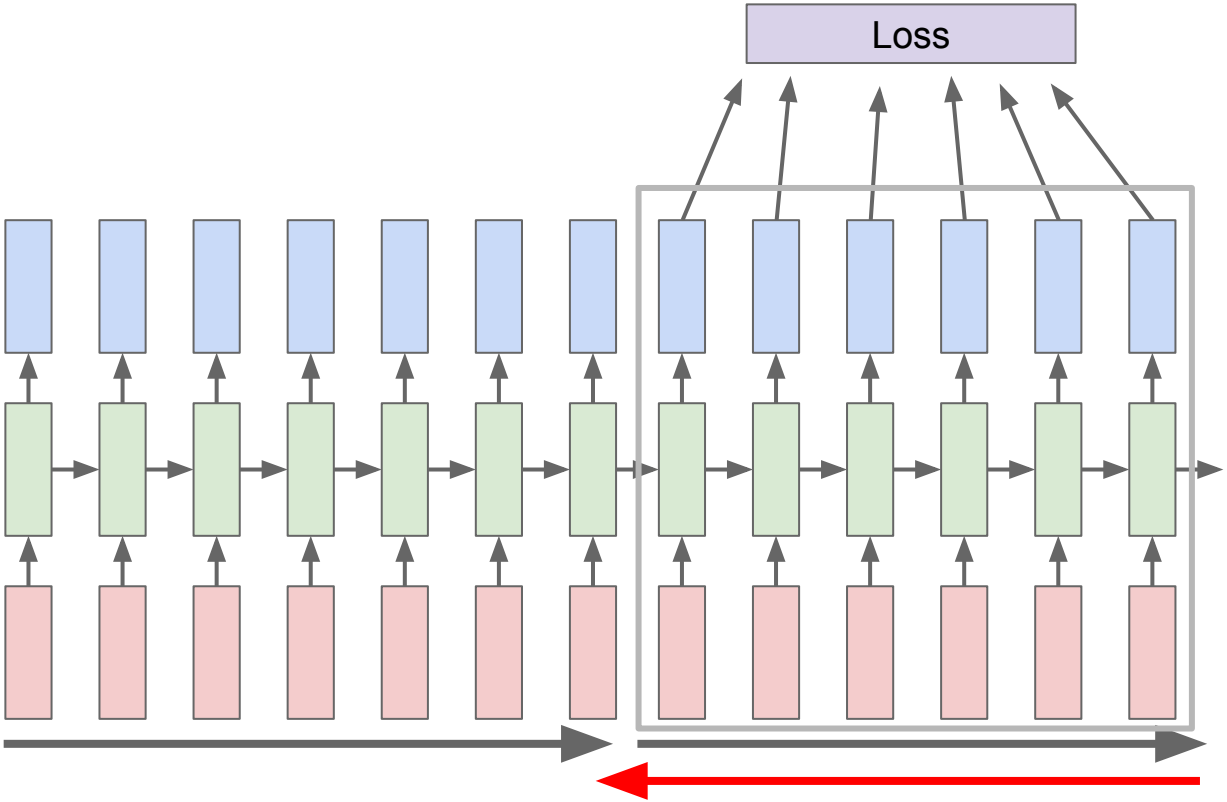

Carry hidden states forward in time forever, but only backpropagate for some smaller number of steps

Truncated Backpropagation through time

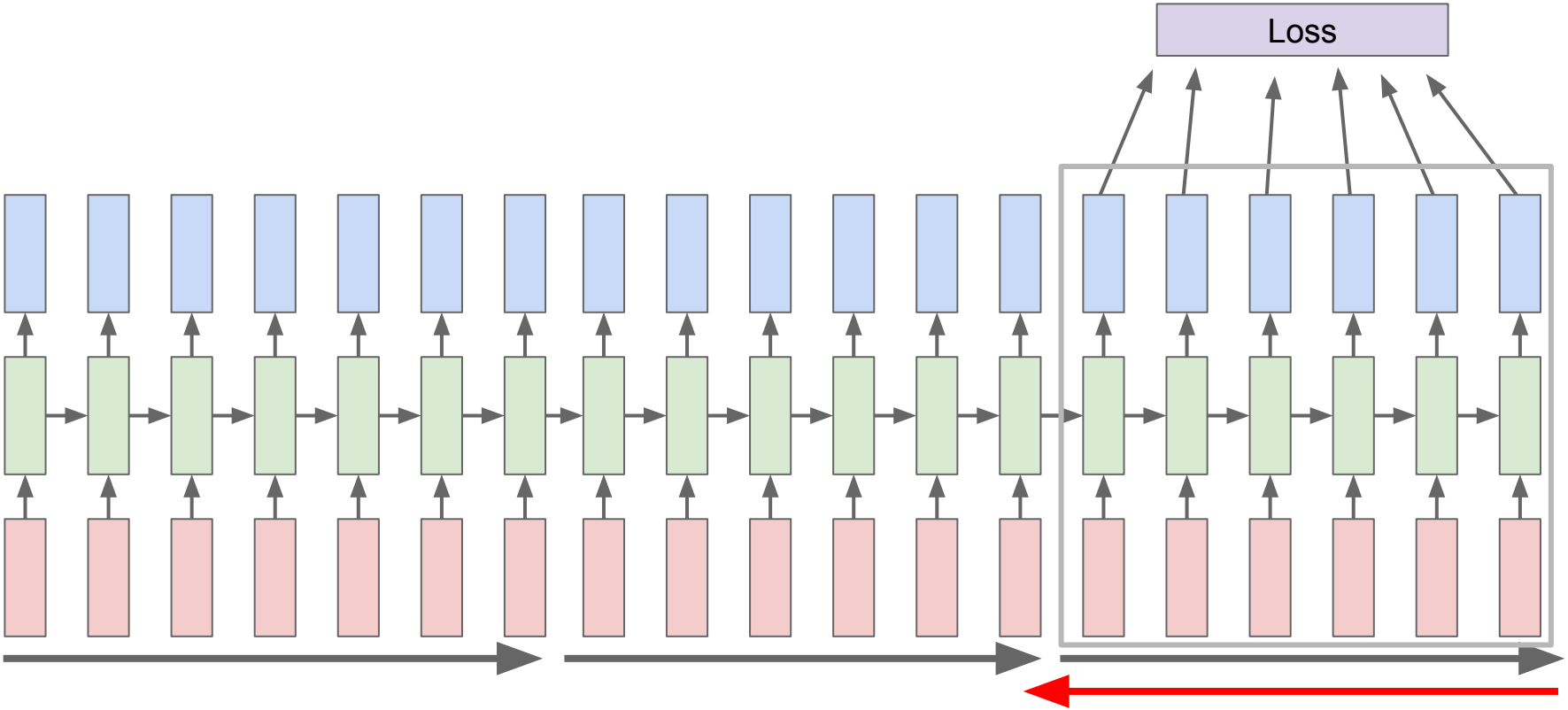

min-char-rnn.py gist: 112 lines of Python

```python
"""
Minimal character-level Vanilla RNN model. Written by Andrej Karpathy (@karpathy)
BSD License
"""
import numpy as np

# data I/O
data = open('input.txt', 'r').read() # should be simple plain text file
chars = list(set(data))
data_size, vocab_size = len(data), len(chars)
print 'data has %d characters, %d unique.' % (data_size, vocab_size)
char_to_ix = { ch:i for i,ch in enumerate(chars) }
ix_to_char = { i:ch for i,ch in enumerate(chars) }

# hyperparameters
hidden_size = 100 # size of hidden layer of neurons
seq_length = 25 # number of steps to unroll the RNN for
learning_rate = 1e-1

# model parameters
Wxh = np.random.randn(hidden_size, vocab_size)*0.01 # input to hidden
Whh = np.random.randn(hidden_size, hidden_size)*0.01 # hidden to hidden
Why = np.random.randn(vocab_size, hidden_size)*0.01 # hidden to output
bh = np.zeros((hidden_size, 1)) # hidden bias
by = np.zeros((vocab_size, 1)) # output bias

def lossFun(inputs, targets, hprev):
  """
  inputs,targets are both list of integers.
  hprev is Hx1 array of initial hidden state
  returns the loss, gradients on model parameters, and last hidden state
  """
  xs, hs, ys, ps = {}, {}, {}, {}
  hs[-1] = np.copy(hprev)
  loss = 0
  # forward pass
  for t in xrange(len(inputs)):
    xs[t] = np.zeros((vocab_size,1)) # encode in 1-of-k representation
    xs[t][inputs[t]] = 1
    hs[t] = np.tanh(np.dot(Wxh, xs[t]) + np.dot(Whh, hs[t-1]) + bh) # hidden state
    ys[t] = np.dot(Why, hs[t]) + by # unnormalized log probabilities for next chars
    ps[t] = np.exp(ys[t]) / np.sum(np.exp(ys[t])) # probabilities for next chars
    loss += -np.log(ps[t][targets[t],0]) # softmax (cross-entropy loss)
  # backward pass: compute gradients going backwards
  dWxh, dWhh, dWhy = np.zeros_like(Wxh), np.zeros_like(Whh), np.zeros_like(Why)
  dbh, dby = np.zeros_like(bh), np.zeros_like(by)
  dhnext = np.zeros_like(hs[0])
  for t in reversed(xrange(len(inputs))):
    dy = np.copy(ps[t])
    dy[targets[t]] -= 1 # backprop into y
    dWhy += np.dot(dy, hs[t].T)
    dby += dy
    dh = np.dot(Why.T, dy) + dhnext # backprop into h
    dhraw = (1 - hs[t] * hs[t]) * dh # backprop through tanh nonlinearity
    dbh += dhraw
    dWxh += np.dot(dhraw, xs[t].T)
    dWhh += np.dot(dhraw, hs[t-1].T)
    dhnext = np.dot(Whh.T, dhraw)
  for dparam in [dWxh, dWhh, dWhy, dbh, dby]:
    np.clip(dparam, -5, 5, out=dparam) # clip to mitigate exploding gradients
  return loss, dWxh, dWhh, dWhy, dbh, dby, hs[len(inputs)-1]

def sample(h, seed_ix, n):
  """
  sample a sequence of integers from the model
  h is memory state, seed_ix is seed letter for first time step
  """
  x = np.zeros((vocab_size, 1))
  x[seed_ix] = 1
  ixes = []
  for t in xrange(n):
    h = np.tanh(np.dot(Wxh, x) + np.dot(Whh, h) + bh)
    y = np.dot(Why, h) + by
    p = np.exp(y) / np.sum(np.exp(y))
    ix = np.random.choice(range(vocab_size), p=p.ravel())
    x = np.zeros((vocab_size, 1))
    x[ix] = 1
    ixes.append(ix)
  return ixes

n, p = 0, 0
mWxh, mWhh, mWhy = np.zeros_like(Wxh), np.zeros_like(Whh), np.zeros_like(Why)
mbh, mby = np.zeros_like(bh), np.zeros_like(by) # memory variables for Adagrad
smooth_loss = -np.log(1.0/vocab_size)*seq_length # loss at iteration 0
while True:
  # prepare inputs (we're sweeping from left to right in steps seq_length long)
  if p+seq_length+1 >= len(data) or n == 0:
    hprev = np.zeros((hidden_size,1)) # reset RNN memory
    p = 0 # go from start of data
  inputs = [char_to_ix[ch] for ch in data[p:p+seq_length]]
  targets = [char_to_ix[ch] for ch in data[p+1:p+seq_length+1]]

  # sample from the model now and then
  if n % 100 == 0:
    sample_ix = sample(hprev, inputs[0], 200)
    txt = ''.join(ix_to_char[ix] for ix in sample_ix)
    print '----\n %s \n----' % (txt, )

  # forward seq_length characters through the net and fetch gradient
  loss, dWxh, dWhh, dWhy, dbh, dby, hprev = lossFun(inputs, targets, hprev)
  smooth_loss = smooth_loss * 0.999 + loss * 0.001
  if n % 100 == 0: print 'iter %d, loss: %f' % (n, smooth_loss) # print progress

  # perform parameter update with Adagrad
  for param, dparam, mem in zip([Wxh, Whh, Why, bh, by],
                                [dWxh, dWhh, dWhy, dbh, dby],
                                [mWxh, mWhh, mWhy, mbh, mby]):
    mem += dparam * dparam
    param += -learning_rate * dparam / np.sqrt(mem + 1e-8) # adagrad update

  p += seq_length # move data pointer
  n += 1 # iteration counter
```

(https://gist.github.com/karpathy/d4dee566867f8291f086)

THE SONNETS

by William Shakespeare

From fairest creatures we desire increase,
That thereby beauty's rose might never die,
But as the riper should by time decease,
His tender heir might bear his memory:
But thou, contracted to thine own bright eyes,
Feed'st thy light's flame with self-substantial fuel,
Making a famine where abundance lies,
Thyself thy foe, to thy sweet self too cruel:
Thou that art now the world's fresh ornament,
And only herald to the gaudy spring,
Within thine own bud buriest thy content,
And tender churl mak'st waste in niggarding:
    Pity the world, or else this glutton be,
    To eat the world's due, by the grave and thee.

When forty winters shall besiege thy brow,
And dig deep trenches in thy beauty's field,
Thy youth's proud livery so gazed on now,
Will be a tatter'd weed of small worth held:
Then being asked, where all thy beauty lies,
Where all the treasure of thy lusty days;
To say, within thine own deep sunken eyes,
Were an all-eating shame, and thriftless praise.
How much more praise deserv'd thy beauty's use,
If thou couldst answer 'This fair child of mine
Shall sum my count, and make my old excuse,'
Proving his beauty by succession thine!
    This were to be new made when thou art old,
    And see thy blood warm when thou feel'st it cold.

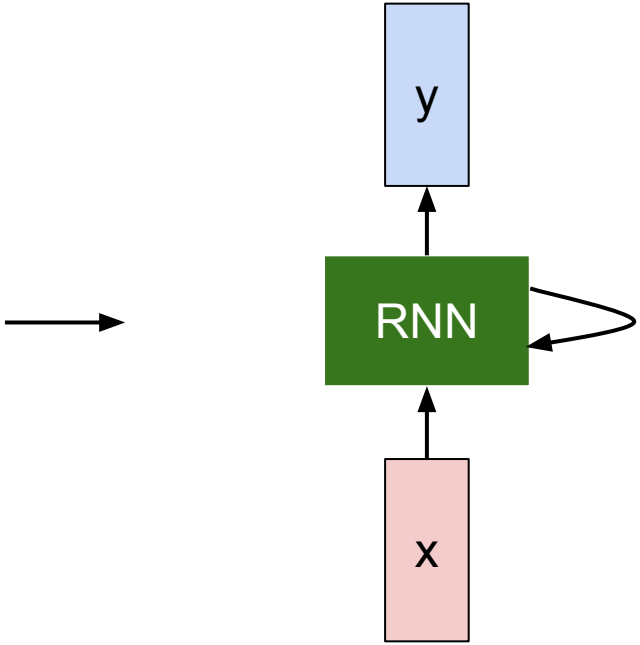

at first:

```
tyntd-iafhatawiaoihrdemot  lytdws  e ,tfti, astai f ogoh eoase rrranbyne 'nhthnee e
plia tklrgd t o idoe ns,smtt   h ne etie h,hregtrs nigtike,aoaenns lng
```

train more

```
"Tmont thithey" fomesscerliund
Keushey. Thom here
sheulke, anmerenith ol sivh I lalterthend Bleipile shuwy fil on aseterlome
coaniogennc Phe lism thond hon at. MeiDimorotion in ther thize."
```

train more

```
Aftair fall unsuch that the hall for Prince Velzonski's that me of
her hearly, and behs to so arwage fiving were to it beloge, pavu say falling misfort
how, and Gogition is so overelical and ofter.
```

train more

```
"Why do what that day," replied Natasha, and wishing to himself the fact the
princess, Princess Mary was easier, fed in had oftened him.
Pierre aking his soul came to the packs and drove up his father-in-law women.
```

PANDARUS:
Alas, I think he shall be come approached and the day
When little srain would be attain'd into being never fed,
And who is but a chain and subjects of his death,
I should not sleep.

Second Senator:
They are away this miseries, produced upon my soul,
Breaking and strongly should be buried, when I perish
The earth and thoughts of many states.

DUKE VINCENTIO:
Well, your wit is in the care of side and that.

Second Lord:
They would be ruled after this chamber, and
my fair nues begun out of the fact, to be conveyed,
Whose noble souls I'll have the heart of the wars.

Clown:
Come, sir, I will make did behold your worship.

VIOLA:
I'll drink it.

VIOLA:
Why, Salisbury must find his flesh and thought
That which I am not aps, not a man and in fire,
To show the reining of the raven and the wars
To grace my hand reproach within, and not a fair are hand,
That Caesar and my goodly father's world;
When I was heaven of presence and our fleets,
We spare with hours, but cut thy council I am great,
Murdered and by thy master's ready there
My power to give thee but so much as hell:
Some service in the noble bondman here,
Would show him to her wine.

KING LEAR:
O, if you were a feeble sight, the courtesy of your law,
Your sight and several breath, will wear the gods
With his heads, and my hands are wonder'd at the deeds,
So drop upon your lordship's head, and your opinion
Shall be against your honour.

The Stacks Project: open source algebraic geometry textbook

The Stacks Project

home | about | tags explained | tag lookup | browse | search | bibliography | recent comments | blog | add slogans

Browse chapters

Part	Chapter	online	TeX source	view pdf
Preliminaries				
	1. Introduction	online	tex	pdf
	2. Conventions	online	tex	pdf
	3. Set Theory	online	tex	pdf
	4. Categories	online	tex	pdf
	5. Topology	online	tex	pdf
	6. Sheaves on Spaces	online	tex	pdf
	7. Sites and Sheaves	online	tex	pdf
	8. Stacks	online	tex	pdf
	9. Fields	online	tex	pdf
	10. Commutative Algebra	online	tex	pdf

Parts

1. Preliminaries
2. Schemes
3. Topics in Scheme Theory
4. Algebraic Spaces
5. Topics in Geometry
6. Deformation Theory
7. Algebraic Stacks
8. Miscellany

Statistics

The Stacks project now consists of

- 455910 lines of code
- 14221 tags (56 inactive tags)
- 2366 sections

Latex source

http://stacks.math.columbia.edu/

For $\bigoplus_{n=1,\ldots,m}$ where $\mathcal{L}_{m_\bullet} = 0$, hence we can find a closed subset $\mathcal{H}$ in $\mathcal{H}$ and any sets $\mathcal{F}$ on X, U is a closed immersion of S, then $U \to T$ is a separated algebraic space.

Proof. Proof of (1). It also start we get

$$S = \mathrm{Spec}(R) = U \times_X U \times_X U$$

and the compariccoly in the fibre product covering we have to prove the lemma generated by $\coprod Z \times_U U \to V$. Consider the maps M along the set of points Sch_{fppf} and $U \to U$ is the fibre category of S in U in Section, ?? and the fact that any U affine, see Morphisms, Lemma ??. Hence we obtain a scheme S and any open subset $W \subset U$ in $Sh(G)$ such that $\mathrm{Spec}(R') \to S$ is smooth or an

$$U = \bigcup U_i \times_{S_i} U_i$$

which has a nonzero morphism we may assume that f_i is of finite presentation over S. We claim that $\mathcal{O}_{X,x}$ is a scheme where $x, x', s'' \in S'$ such that $\mathcal{O}_{X,x'} \to \mathcal{O}'_{X',x'}$ is separated. By Algebra, Lemma ?? we can define a map of complexes $\mathrm{GL}_{S'}(x'/S'')$ and we win. □

To prove study we see that $\mathcal{F}|_U$ is a covering of $\mathcal{X}'$, and $\mathcal{T}_i$ is an object of $\mathcal{F}_{X/S}$ for $i > 0$ and $\mathcal{F}_p$ exists and let $\mathcal{F}_i$ be a presheaf of $\mathcal{O}_X$-modules on $\mathcal{C}$ as a $\mathcal{F}$-module. In particular $\mathcal{F} = U/\mathcal{F}$ we have to show that

$$\widetilde{M}^\bullet = \mathcal{I}^\bullet \otimes_{\mathrm{Spec}(k)} \mathcal{O}_{S,s} - i_X^{-1}\mathcal{F})$$

is a unique morphism of algebraic stacks. Note that

$$\mathrm{Arrows} = (Sch/S)^{opp}_{fppf}, (Sch/S)_{fppf}$$

and

$$V = \Gamma(S, \mathcal{O}) \longmapsto (U, \mathrm{Spec}(A))$$

is an open subset of X. Thus U is affine. This is a continuous map of X is the inverse, the groupoid scheme S.

Proof. See discussion of sheaves of sets. □

The result for prove any open covering follows from the less of Example ??. It may replace S by $X_{spaces,étale}$ which gives an open subspace of X and T equal to S_{Zar}, see Descent, Lemma ??. Namely, by Lemma ?? we see that R is geometrically regular over S.

Lemma 0.1. *Assume (3) and (3) by the construction in the description.*

Suppose $X = \lim |X|$ (by the formal open covering X and a single map $\underline{Proj}_X(\mathcal{A}) = \mathrm{Spec}(B)$ over U compatible with the complex

$$Set(\mathcal{A}) = \Gamma(X, \mathcal{O}_{X,\mathcal{O}_X}).$$

When in this case of to show that $\mathcal{Q} \to \mathcal{C}_{Z/X}$ is stable under the following result in the second conditions of (1), and (3). This finishes the proof. By Definition ?? (without element is when the closed subschemes are catenary. If T is surjective we may assume that T is connected with residue fields of S. Moreover there exists a closed subspace $Z \subset X$ of X where U in X' is proper (some defining as a closed subset of the uniqueness it suffices to check the fact that the following theorem

(1) *f is locally of finite type. Since $S = \mathrm{Spec}(R)$ and $Y = \mathrm{Spec}(R)$.*

Proof. This is form all sheaves of sheaves on X. But given a scheme U and a surjective étale morphism $U \to X$. Let $U \cap U = \coprod_{i=1,\ldots,n} U_i$ be the scheme X over S at the schemes $X_i \to X$ and $U = \lim_i X_i$. □

The following lemma surjective restrocomposes of this implies that $\mathcal{F}_{x_0} = \mathcal{F}_{x_0} = \mathcal{F}_{\mathcal{X},\ldots,0}$.

Lemma 0.2. *Let X be a locally Noetherian scheme over S, $E = \mathcal{F}_{X/S}$. Set $\mathcal{I} = \mathcal{J}_1 \subset \mathcal{I}'_n$. Since $\mathcal{I}^n \subset \mathcal{I}^n$ are nonzero over $i_0 \leq \mathfrak{p}$ is a subset of $\mathcal{J}_{n,0} \circ \overline{A}_2$ works.*

Lemma 0.3. *In Situation ??. Hence we may assume $\mathfrak{q}' = 0$.*

Proof. We will use the property we see that $\mathfrak{p}$ is the mext functor (??). On the other hand, by Lemma ?? we see that

$$D(\mathcal{O}_{X'}) = \mathcal{O}_X(D)$$

where K is an F-algebra where δ_{n+1} is a scheme over S. □

Proof. Omitted. □

Lemma 0.1. *Let $\mathcal{C}$ be a set of the construction.*

Let $\mathcal{C}$ be a gerber covering. Let $\mathcal{F}$ be a quasi-coherent sheaves of $\mathcal{O}$-modules. We have to show that

$$\mathcal{O}_{\mathcal{O}_X} = \mathcal{O}_X(\mathcal{L})$$

.

Proof. This is an algebraic space with the composition of sheaves $\mathcal{F}$ on $X_{\acute{e}tale}$ we have

$$\mathcal{O}_X(\mathcal{F}) = \{morph_1 \times_{\mathcal{O}_X} (\mathcal{G}, \mathcal{F})\}$$

where $\mathcal{G}$ defines an isomorphism $\mathcal{F} \to \mathcal{F}$ of $\mathcal{O}$-modules. □

Lemma 0.2. *This is an integer $\mathcal{Z}$ is injective.*

Proof. See Spaces, Lemma ??. □

Lemma 0.3. *Let S be a scheme. Let X be a scheme and X is an affine open covering. Let $\mathcal{U} \subset \mathcal{X}$ be a canonical and locally of finite type. Let X be a scheme. Let X be a scheme which is equal to the formal complex.*

The following to the construction of the lemma follows.

Let X be a scheme. Let X be a scheme covering. Let

$$b : X \to Y' \to Y \to Y \to Y' \times_X Y \to X.$$

be a morphism of algebraic spaces over S and Y.

Proof. Let X be a nonzero scheme of X. Let X be an algebraic space. Let $\mathcal{F}$ be a quasi-coherent sheaf of $\mathcal{O}_X$-modules. The following are equivalent

(1) $\mathcal{F}$ is an algebraic space over S.
(2) If X is an affine open covering.

Consider a common structure on X and X the functor $\mathcal{O}_X(U)$ which is locally of finite type. □

This since $\mathcal{F} \in \mathcal{F}$ and $x \in \mathcal{G}$ the diagram

$$\begin{tikzcd}
\mathcal{S} \arrow[r] \arrow[d] & & \\
\xi \arrow[r] & \mathcal{O}_{X'} \arrow[dr] & \\
\mathrm{gor}_s \arrow[u] & & \\
 & = \alpha' \arrow[r] \arrow[d, leftrightarrow] & \\
 & = \alpha' \arrow[r] & \alpha \\
 & \mathrm{Spec}(K_\psi) & \mathrm{Mor}_{Sets} \quad \mathrm{d}(\mathcal{O}_{X_{X/k}}, \mathcal{G}) \arrow[u] & X \arrow[u]
\end{tikzcd}$$

is a limit. Then $\mathcal{G}$ is a finite type and assume S is a flat and $\mathcal{F}$ and $\mathcal{G}$ is a finite type f_*. This is of finite type diagrams, and

- the composition of $\mathcal{G}$ is a regular sequence,
- $\mathcal{O}_{X'}$ is a sheaf of rings.

□

Proof. We have see that $X = \mathrm{Spec}(R)$ and $\mathcal{F}$ is a finite type representable by algebraic space. The property $\mathcal{F}$ is a finite morphism of algebraic stacks. Then the cohomology of X is an open neighbourhood of U. □

Proof. This is clear that $\mathcal{G}$ is a finite presentation, see Lemmas ??.
A *reduced above* we conclude that U is an open covering of $\mathcal{C}$. The functor $\mathcal{F}$ is a "field

$$\mathcal{O}_{X,x} \longrightarrow \mathcal{F}_{\overline{x}} \quad \text{-1}(\mathcal{O}_{X_{\acute{e}tale}}) \longrightarrow \mathcal{O}_{X_\ell}^{-1}\mathcal{O}_{X_\lambda}(\mathcal{O}_{X_\eta}^{\overline{\eta}})$$

is an isomorphism of covering of $\mathcal{O}_{X_i}$. If $\mathcal{F}$ is the unique element of $\mathcal{F}$ such that X is an isomorphism.
The property $\mathcal{F}$ is a disjoint union of Proposition ?? and we can filtered set of presentations of a scheme $\mathcal{O}_X$-algebra with $\mathcal{F}$ are opens of finite type over S.
If $\mathcal{F}$ is a scheme theoretic image points. □

If $\mathcal{F}$ is a finite direct sum $\mathcal{O}_{X_\lambda}$ is a closed immersion, see Lemma ??. This is a sequence of $\mathcal{F}$ is a similar morphism.

This repository Search Explore Gist Blog Help karpathy

torvalds / linux

Watch 3,711 Star 23,054 Fork 9,141

Linux kernel source tree

520,037 commits 1 branch 420 releases 5,039 contributors

branch: master linux / +

Merge branch 'drm-fixes' of git://people.freedesktop.org/~airlied/linux

torvalds authored 9 hours ago latest commit 4b1706927d

Documentation	Merge git://git.kernel.org/pub/scm/linux/kernel/git/nab/target-pending	6 days ago
arch	Merge branch 'x86-urgent-for-linus' of git://git.kernel.org/pub/scm/l...	a day ago
block	block: discard bdi_unregister() in favour of bdi_destroy()	9 days ago
crypto	Merge git://git.kernel.org/pub/scm/linux/kernel/git/herbert/crypto-2.6	10 days ago
drivers	Merge branch 'drm-fixes' of git://people.freedesktop.org/~airlied/linux	9 hours ago
firmware	firmware/ihex2fw.c: restore missing default in switch statement	2 months ago
fs	vfs: read file_handle only once in handle_to_path	4 days ago
include	Merge branch 'perf-urgent-for-linus' of git://git.kernel.org/pub/scm/...	a day ago
init	init: fix regression by supporting devices with major:minor:offset fo...	a month ago

Code

Pull requests 74

Pulse

Graphs

HTTPS clone URL

https://github.c

You can clone with HTTPS, SSH, or Subversion.

Clone in Desktop

Download ZIP

```c
static void do_command(struct seq_file *m, void *v)
{
  int column = 32 << (cmd[2] & 0x80);
  if (state)
    cmd = (int)(int_state ^ (in_8(&ch->ch_flags) & Cmd) ? 2 : 1);
  else
    seq = 1;
  for (i = 0; i < 16; i++) {
    if (k & (1 << 1))
      pipe = (in_use & UMXTHREAD_UNCCA) +
        ((count & 0x00000000fffffff8) & 0x000000f) << 8;
    if (count == 0)
      sub(pid, ppc_md.kexec_handle, 0x20000000);
    pipe_set_bytes(i, 0);
  }
  /* Free our user pages pointer to place camera if all dash */
  subsystem_info = &of_changes[PAGE_SIZE];
  rek_controls(offset, idx, &soffset);
  /* Now we want to deliberately put it to device */
  control_check_polarity(&context, val, 0);
  for (i = 0; i < COUNTER; i++)
    seq_puts(s, "policy ");
}
```

Generated C code

```
/*
 *  Copyright (c) 2006-2010, Intel Mobile Communications.  All rights reserved.
 *
 *   This program is free software; you can redistribute it and/or modify it
 * under the terms of the GNU General Public License version 2 as published by
 * the Free Software Foundation.
 *
 *        This program is distributed in the hope that it will be useful,
 * but WITHOUT ANY WARRANTY; without even the implied warranty of
 *   MERCHANTABILITY or FITNESS FOR A PARTICULAR PURPOSE.  See the
 *
 *  GNU General Public License for more details.
 *
 *   You should have received a copy of the GNU General Public License
 *    along with this program; if not, write to the Free Software Foundation,
 *  Inc., 675 Mass Ave, Cambridge, MA 02139, USA.
 */

#include <linux/kexec.h>
#include <linux/errno.h>
#include <linux/io.h>
#include <linux/platform_device.h>
#include <linux/multi.h>
#include <linux/ckevent.h>

#include <asm/io.h>
#include <asm/prom.h>
#include <asm/e820.h>
#include <asm/system_info.h>
#include <asm/setew.h>
#include <asm/pgproto.h>
```

```
#include <asm/io.h>
#include <asm/prom.h>
#include <asm/e820.h>
#include <asm/system_info.h>
#include <asm/setew.h>
#include <asm/pgproto.h>

#define REG_PG    vesa_slot_addr_pack
#define PFM_NOCOMP  AFSR(0, load)
#define STACK_DDR(type)     (func)

#define SWAP_ALLOCATE(nr)     (e)
#define emulate_sigs()  arch_get_unaligned_child()
#define access_rw(TST)  asm volatile("movd %%esp, %0, %3" : : "r" (0));   \
  if (__type & DO_READ)

static void stat_PC_SEC __read_mostly offsetof(struct seq_argsqueue, \
          pC>[1]);

static void
os_prefix(unsigned long sys)
{
#ifdef CONFIG_PREEMPT
  PUT_PARAM_RAID(2, sel) = get_state_state();
  set_pid_sum((unsigned long)state, current_state_str(),
           (unsigned long)-1->lr_full; low;
}
```

Searching for interpretable cells

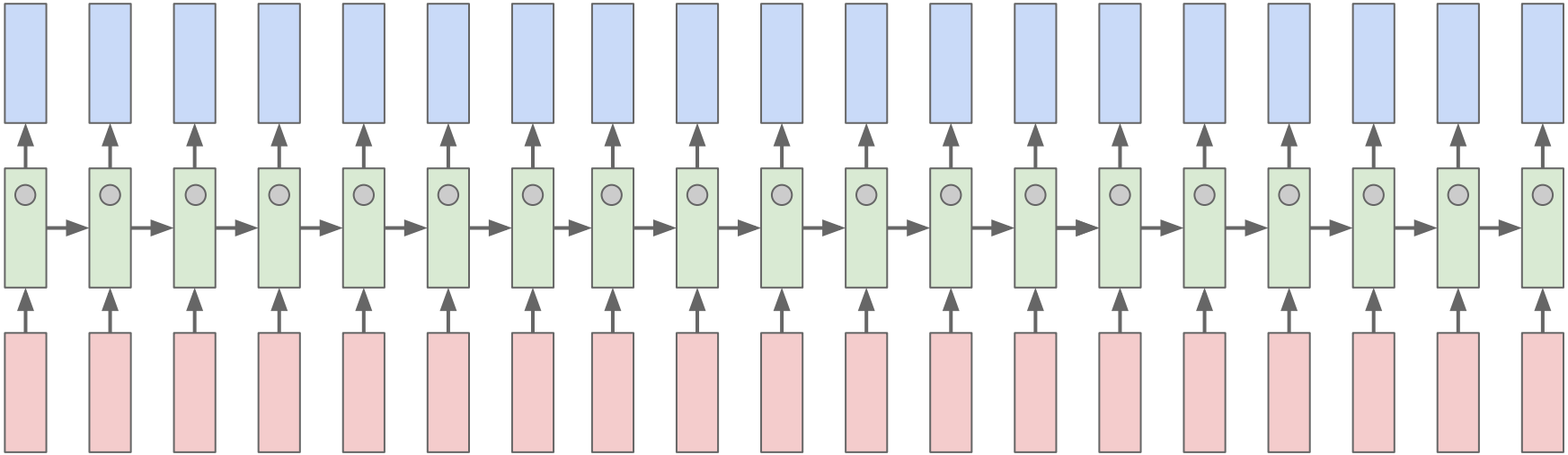

Karpathy, Johnson, and Fei-Fei: Visualizing and Understanding Recurrent Networks, ICLR Workshop 2016

Searching for interpretable cells

```
/* Unpack a filter field's string representation from user-space
 * buffer. */
char *audit_unpack_string(void **bufp, size_t *remain, size_t len)
{
  char *str;
  if (!*bufp || (len == 0) || (len > *remain))
    return ERR_PTR(-EINVAL);
  /* Of the currently implemented string fields, PATH_MAX
   * defines the longest valid length.
   */
```

Karpathy, Johnson, and Fei-Fei: Visualizing and Understanding Recurrent Networks, ICLR Workshop 2016

Searching for interpretable cells

"You mean to imply that I have nothing to eat out of.... On the contrary, I can supply you with everything even if you want to give dinner parties," warmly replied Chichagov, who tried by every word he spoke to prove his own rectitude and therefore imagined Kutuzov to be animated by the same desire.

Kutuzov, shrugging his shoulders, replied with his subtle penetrating smile: "I meant merely to say what I said."

quote detection cell

Karpathy, Johnson, and Fei-Fei: Visualizing and Understanding Recurrent Networks, ICLR Workshop 2016

Searching for interpretable cells

Cell sensitive to position in line:

```
The sole importance of the crossing of the Berezina lies in the fact
that it plainly and indubitably proved the fallacy of all the plans for
cutting off the enemy's retreat and the soundness of the only possible
line of action--the one Kutuzov and the general mass of the army
demanded--namely, simply to follow the enemy up. The French crowd fled
at a continually increasing speed and all its energy was directed to
reaching its goal. It fled like a wounded animal and it was impossible
to block its path. This was shown not so much by the arrangements it
made for crossing as by what took place at the bridges. When the bridges
broke down, unarmed soldiers, people from Moscow and women with children
who were with the French transport, all--carried on by vis inertiae--
pressed forward into boats and into the ice-covered water and did not,
surrender.
```

line length tracking cell

Karpathy, Johnson, and Fei-Fei: Visualizing and Understanding Recurrent Networks, ICLR Workshop 2016

Searching for interpretable cells

```
static int __dequeue_signal(struct sigpending *pending, sigset_t *mask,
    siginfo_t *info)
{
  int sig = next_signal(pending, mask);
  if (sig) {
    if (current->notifier) {
      if (sigismember(current->notifier_mask, sig)) {
        if (!(current->notifier)(current->notifier_data)) {
          clear_thread_flag(TIF_SIGPENDING);
          return 0;
        }
      }
    }
    collect_signal(sig, pending, info);
  }
  return sig;
}
```

if statement cell

Karpathy, Johnson, and Fei-Fei: Visualizing and Understanding Recurrent Networks, ICLR Workshop 2016

Searching for interpretable cells

Cell that turns on inside comments and quotes:

```
/* Duplicate LSM field information. The lsm_rule is opaque, so
 * re-initialized. */
static inline int audit_dupe_lsm_field(struct audit_field *df,
         struct audit_field *sf)
{
  int ret = 0;
  char *lsm_str;
  /* our own copy of lsm_str */
  lsm_str = kstrdup(sf->lsm_str, GFP_KERNEL);
  if (unlikely(!lsm_str))
    return -ENOMEM;
  df->lsm_str = lsm_str;
  /* our own (refreshed) copy of lsm_rule */
  ret = security_audit_rule_init(df->type, df->op, df->lsm_str,
            (void **)&df->lsm_rule);
  /* Keep currently invalid fields around in case they
   * become valid after a policy reload. */
  if (ret == -EINVAL) {
    pr_warn("audit rule for LSM \'%s\' is invalid\n",
      df->lsm_str);
    ret = 0;
  }
  return ret;
}
```

quote/comment cell

Karpathy, Johnson, and Fei-Fei: Visualizing and Understanding Recurrent Networks, ICLR Workshop 2016

Searching for interpretable cells

```
#ifdef CONFIG_AUDITSYSCALL
static inline int audit_match_class_bits(int class, u32 *mask)
{
  int i;
  if (classes[class]) {
    for (i = 0; i < AUDIT_BITMASK_SIZE; i++)
      if (mask[i] & classes[class][i])
        return 0;
  }
  return 1;
}
```

code depth cell

Karpathy, Johnson, and Fei-Fei: Visualizing and Understanding Recurrent Networks, ICLR Workshop 2016

Image Captioning

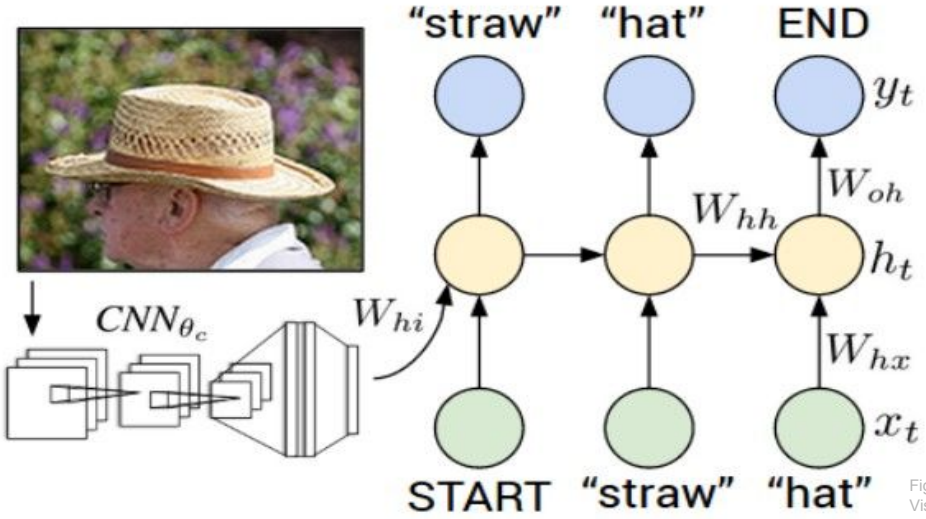

Figure from Karpathy et a, "Deep Visual-Semantic Alignments for Generating Image Descriptions", CVPR 2015; figure copyright IEEE, 2015. Reproduced for educational purposes.

Explain Images with Multimodal Recurrent Neural Networks, Mao et al.
Deep Visual-Semantic Alignments for Generating Image Descriptions, Karpathy and Fei-Fei
Show and Tell: A Neural Image Caption Generator, Vinyals et al.
Long-term Recurrent Convolutional Networks for Visual Recognition and Description, Donahue et al.
Learning a Recurrent Visual Representation for Image Caption Generation, Chen and Zitnick

Recurrent Neural Network

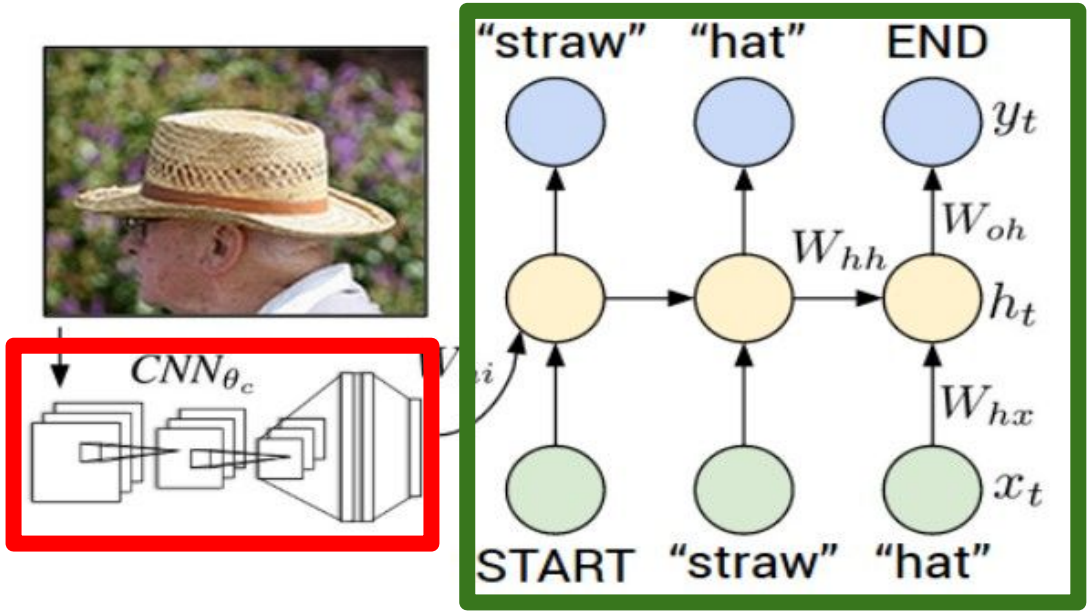

Convolutional Neural Network

test image

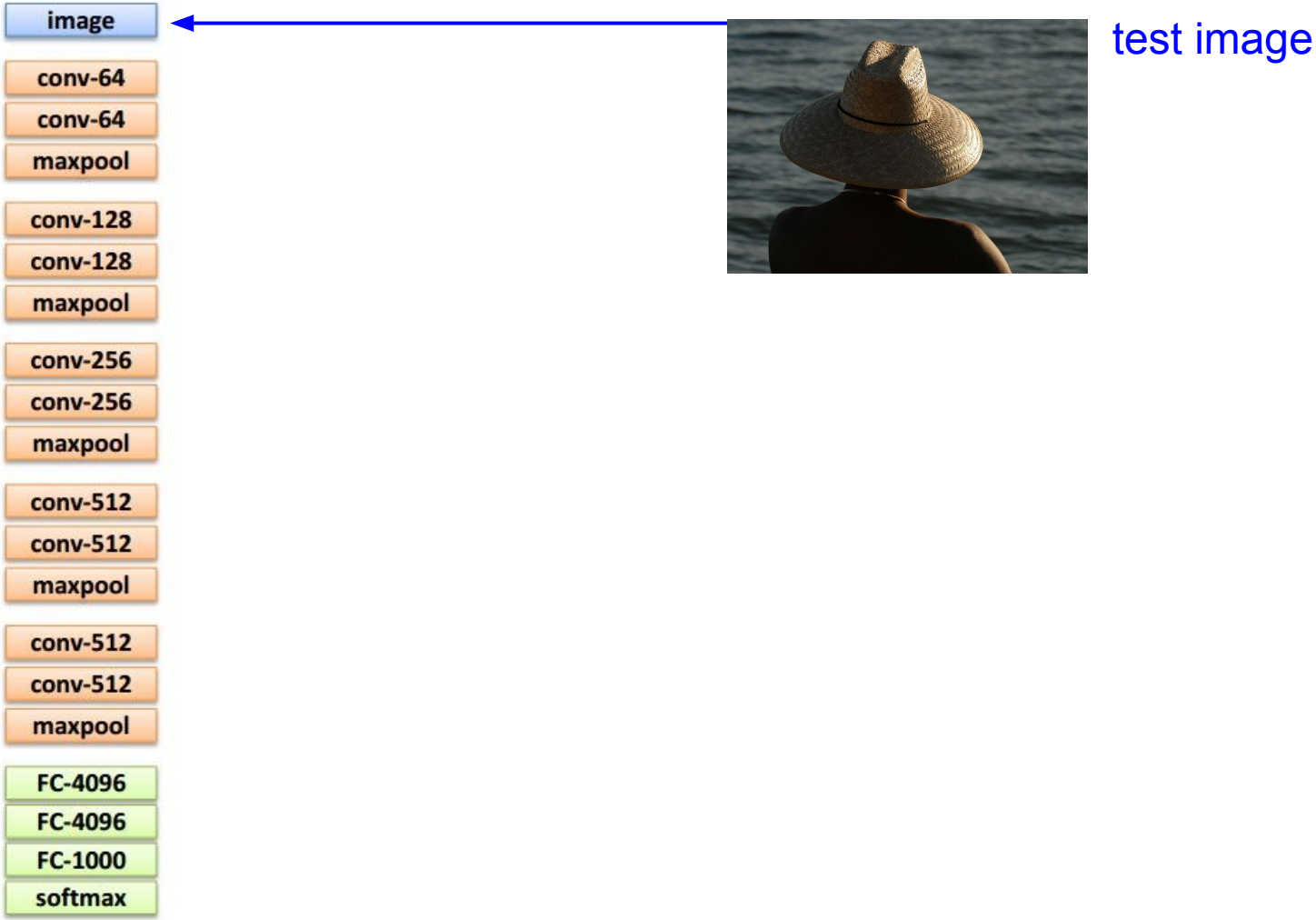
image
conv-64
conv-64
maxpool
conv-128
conv-128
maxpool
conv-256
conv-256
maxpool
conv-512
conv-512
maxpool
conv-512
conv-512
maxpool
FC-4096
FC-4096
FC-1000
softmax
test image

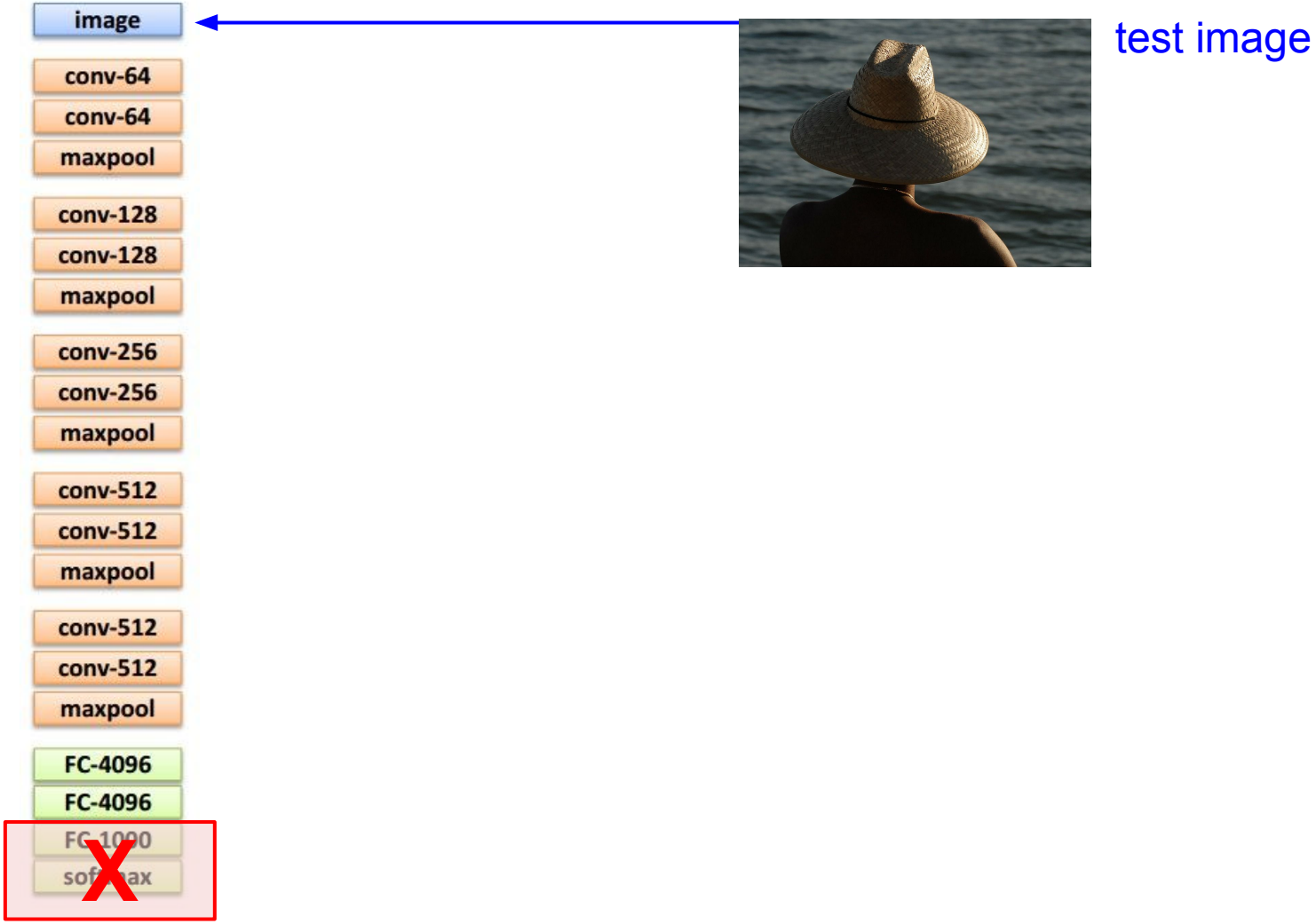
image
conv-64
conv-64
maxpool
conv-128
conv-128
maxpool
conv-256
conv-256
maxpool
conv-512
conv-512
maxpool
conv-512
conv-512
maxpool
FC-4096
FC-4096
FC-1000
softmax
test image

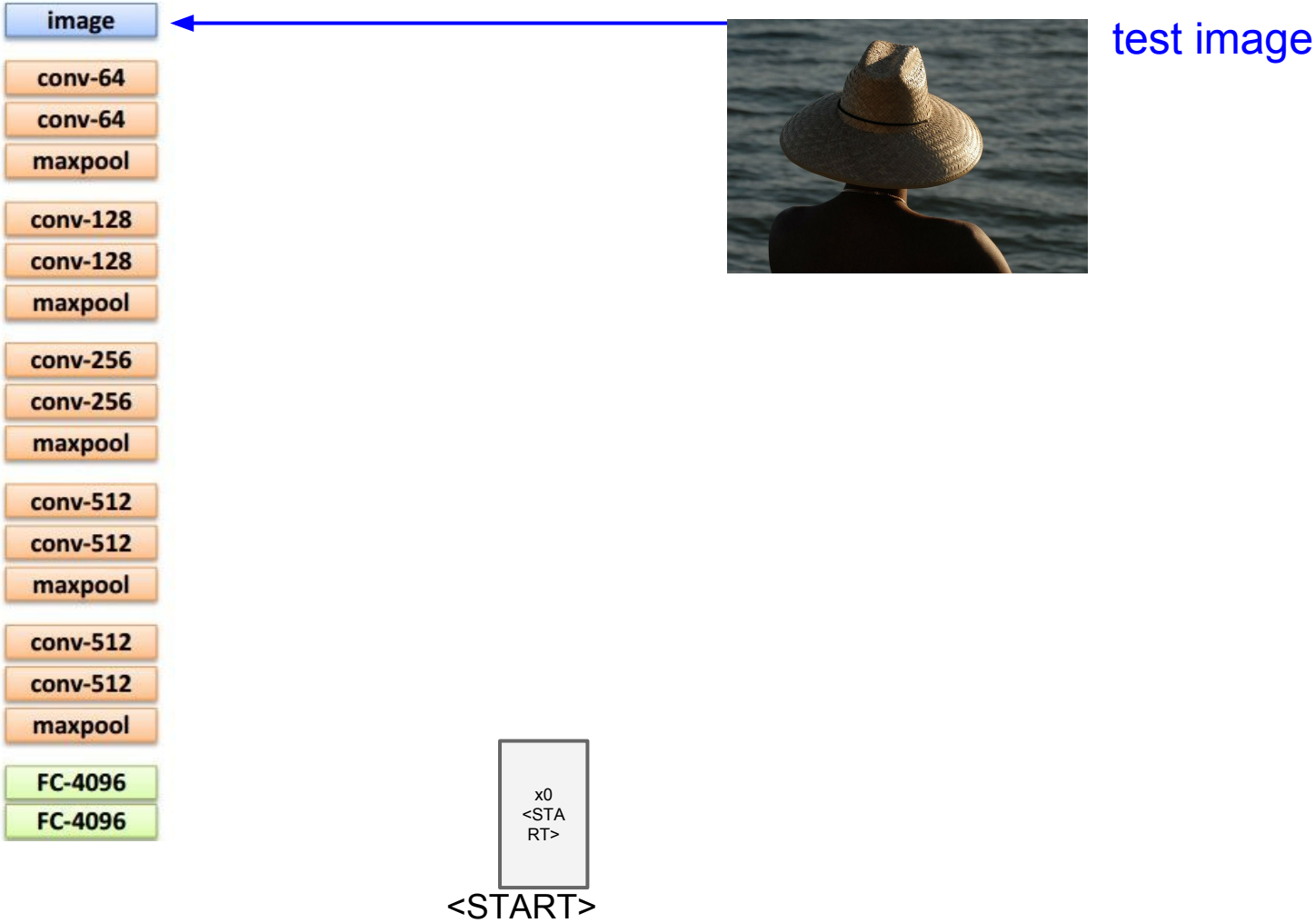
image
conv-64
conv-64
maxpool
conv-128
conv-128
maxpool
conv-256
conv-256
maxpool
conv-512
conv-512
maxpool
conv-512
conv-512
maxpool
FC-4096
FC-4096
test image
x0
<STA
RT>
<START>

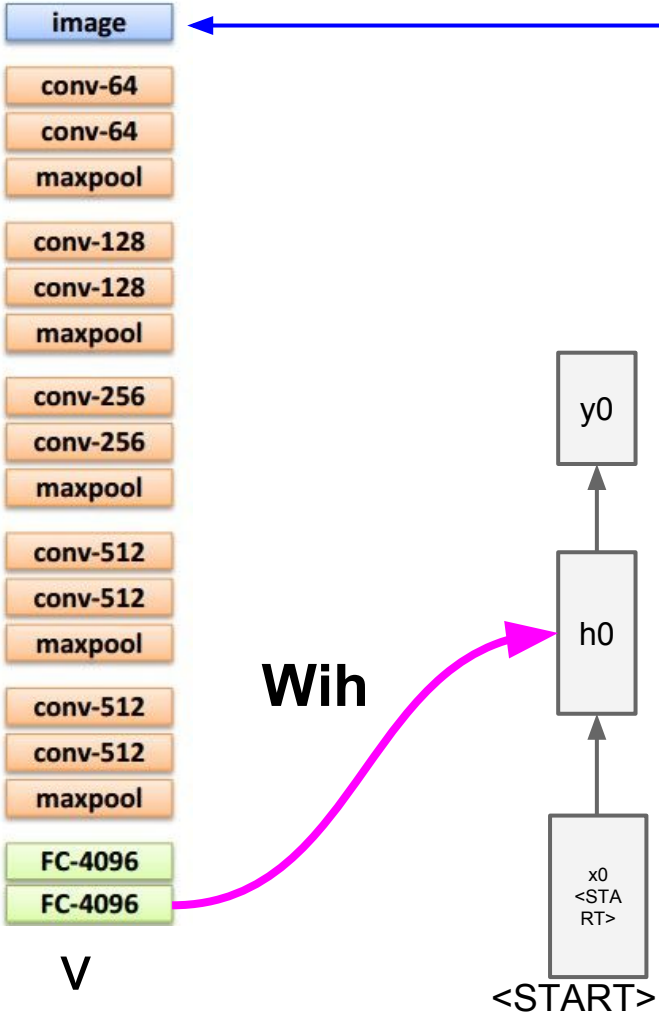

test image

before:

h = tanh(Wxh * x + Whh * h)

now:

h = tanh(Wxh * x + Whh * h **+ Wih * v**)

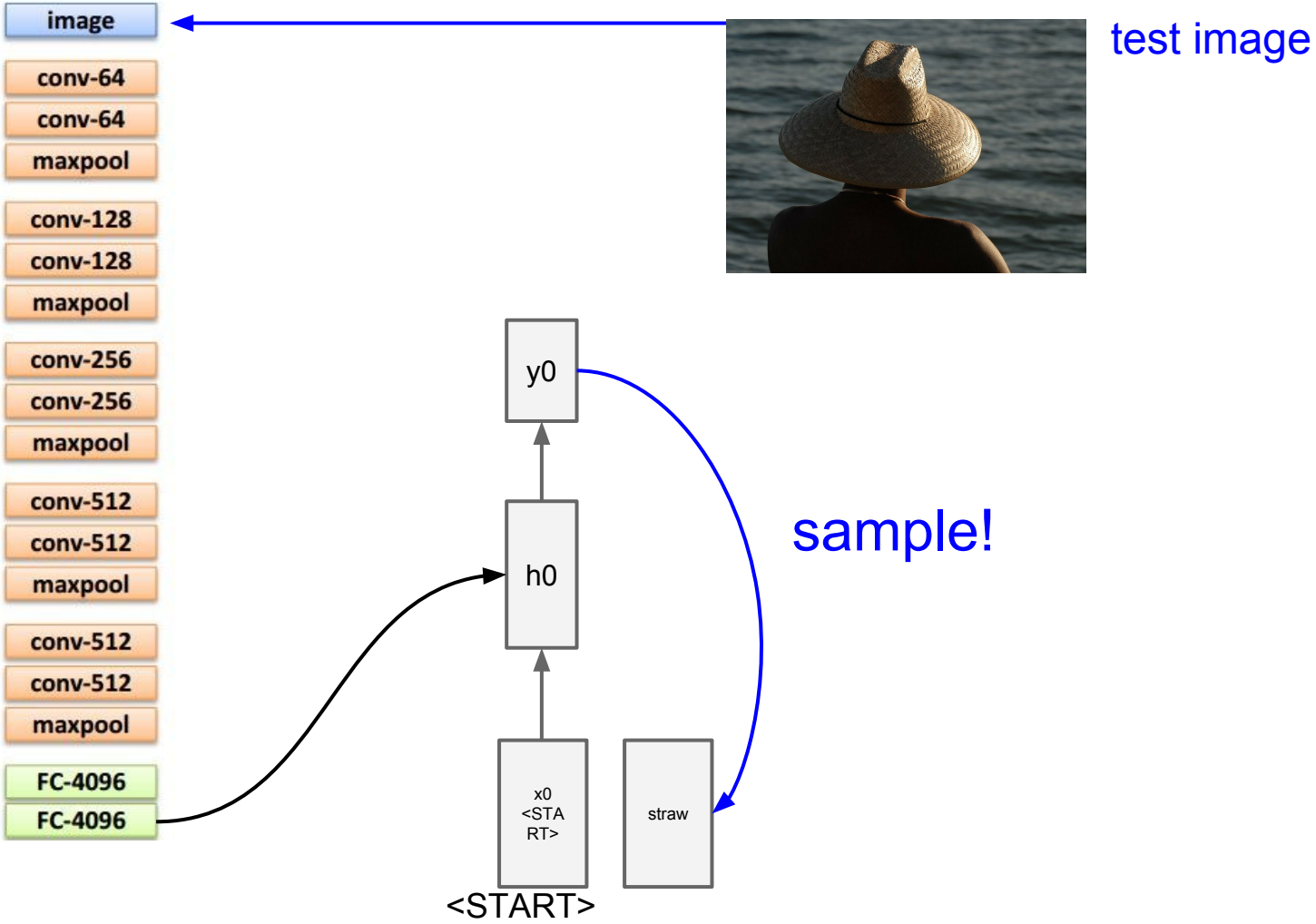
image
conv-64
conv-64
maxpool
conv-128
conv-128
maxpool
conv-256
conv-256
maxpool
conv-512
conv-512
maxpool
conv-512
conv-512
maxpool
FC-4096
FC-4096
test image
y0
h0
sample!
x0
<STA
RT>
straw
<START>

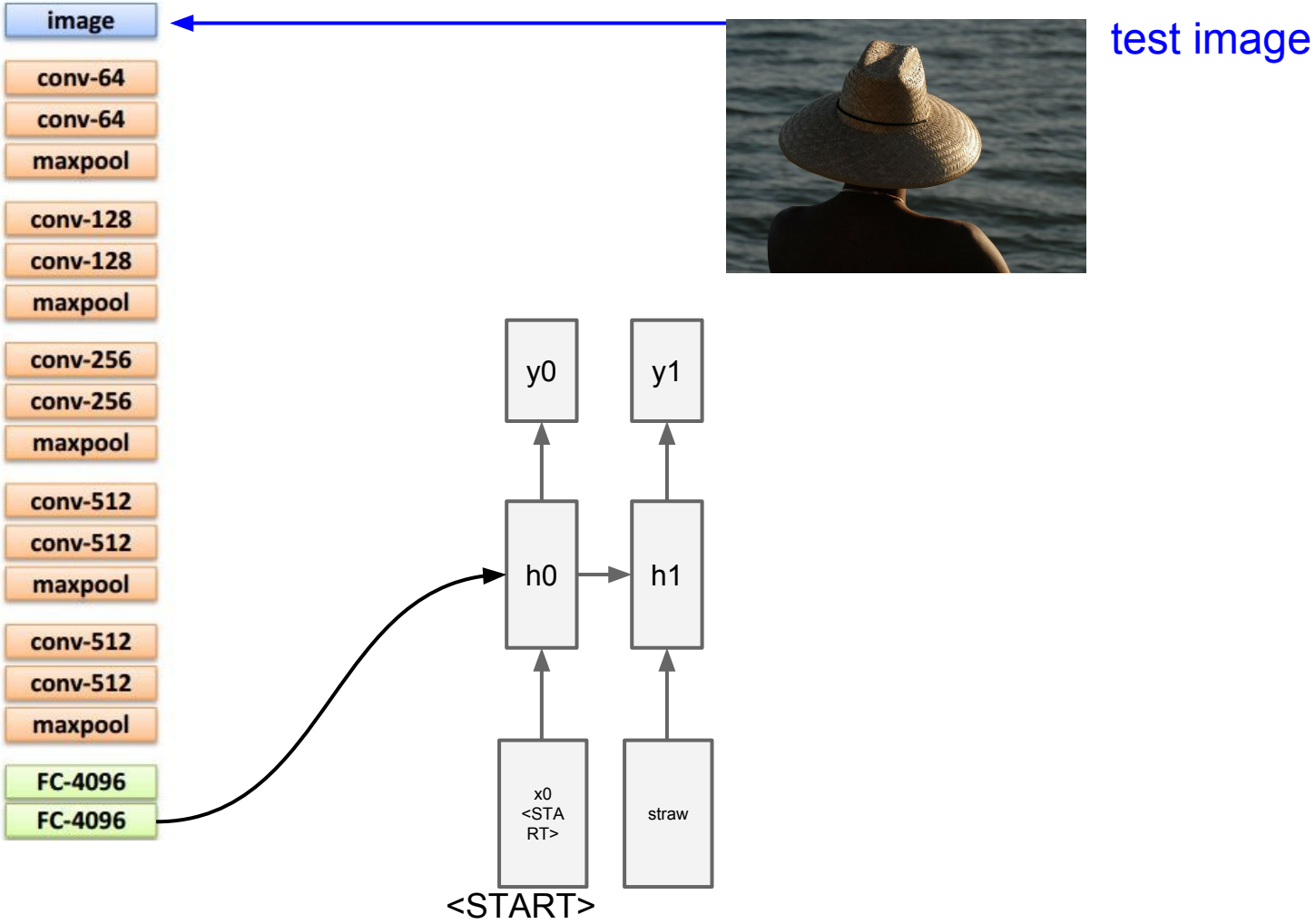
image
test image
conv-64
conv-64
maxpool
conv-128
conv-128
maxpool
conv-256
conv-256
maxpool
conv-512
conv-512
maxpool
conv-512
conv-512
maxpool
FC-4096
FC-4096
y0
y1
h0
h1
x0
<STA
RT>
straw
<START>

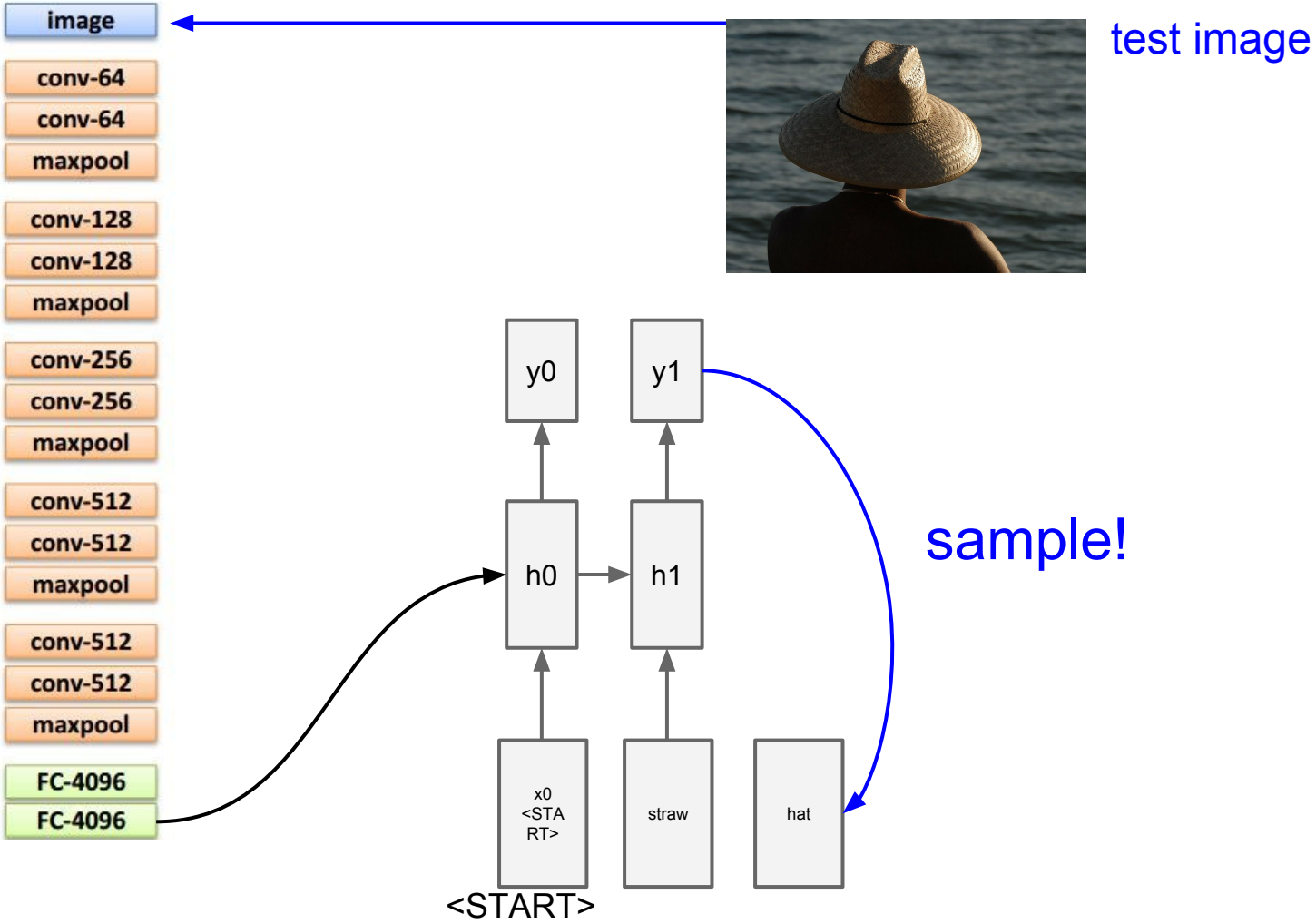
image
conv-64
conv-64
maxpool
conv-128
conv-128
maxpool
conv-256
conv-256
maxpool
conv-512
conv-512
maxpool
conv-512
conv-512
maxpool
FC-4096
FC-4096
test image
y0
y1
h0
h1
sample!
x0
<STA
RT>
straw
hat
<START>

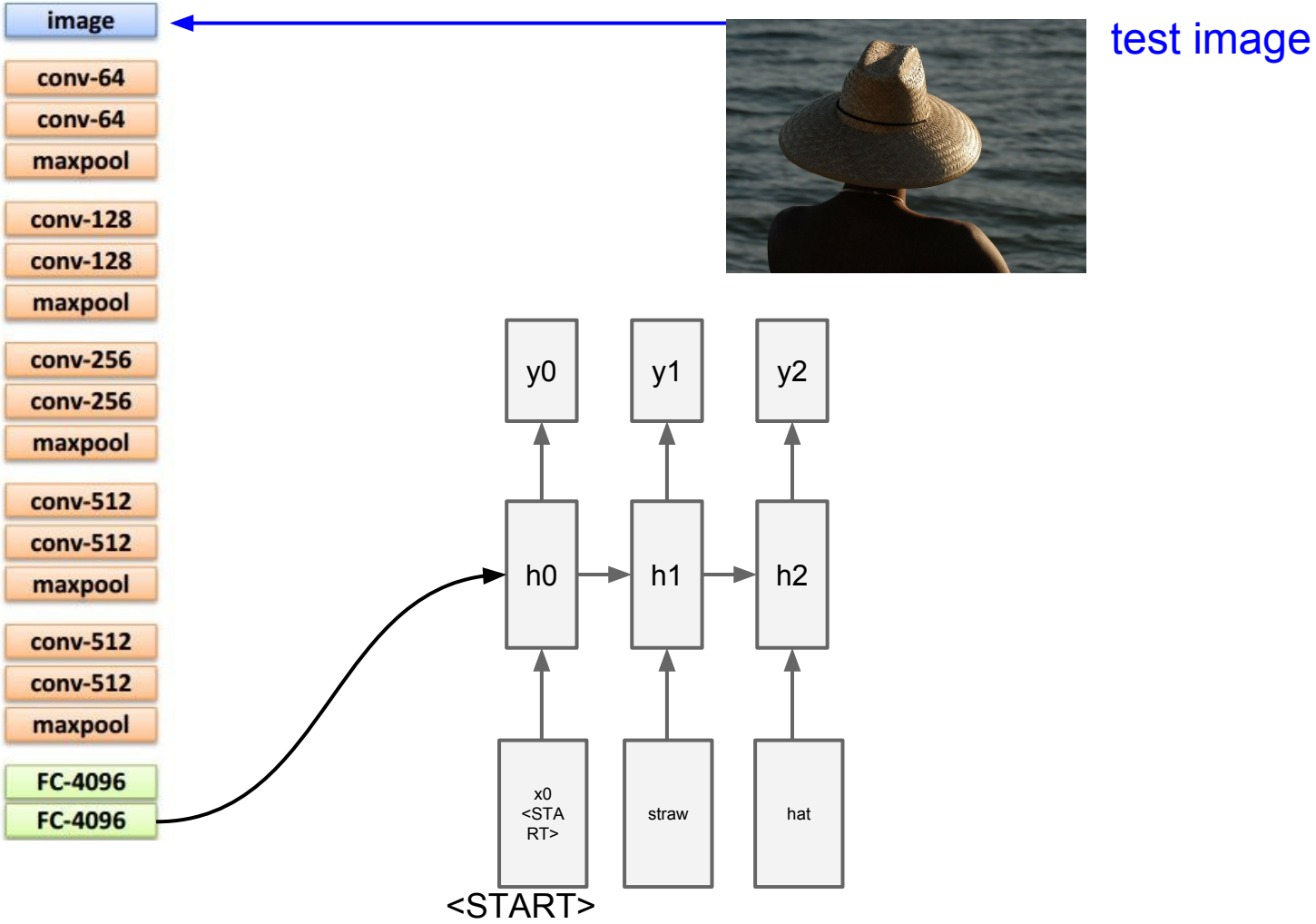
image
test image
conv-64
conv-64
maxpool
conv-128
conv-128
maxpool
conv-256
conv-256
maxpool
conv-512
conv-512
maxpool
conv-512
conv-512
maxpool
FC-4096
FC-4096
y0
y1
y2
h0
h1
h2
x0
<STA
RT>
straw
hat
<START>

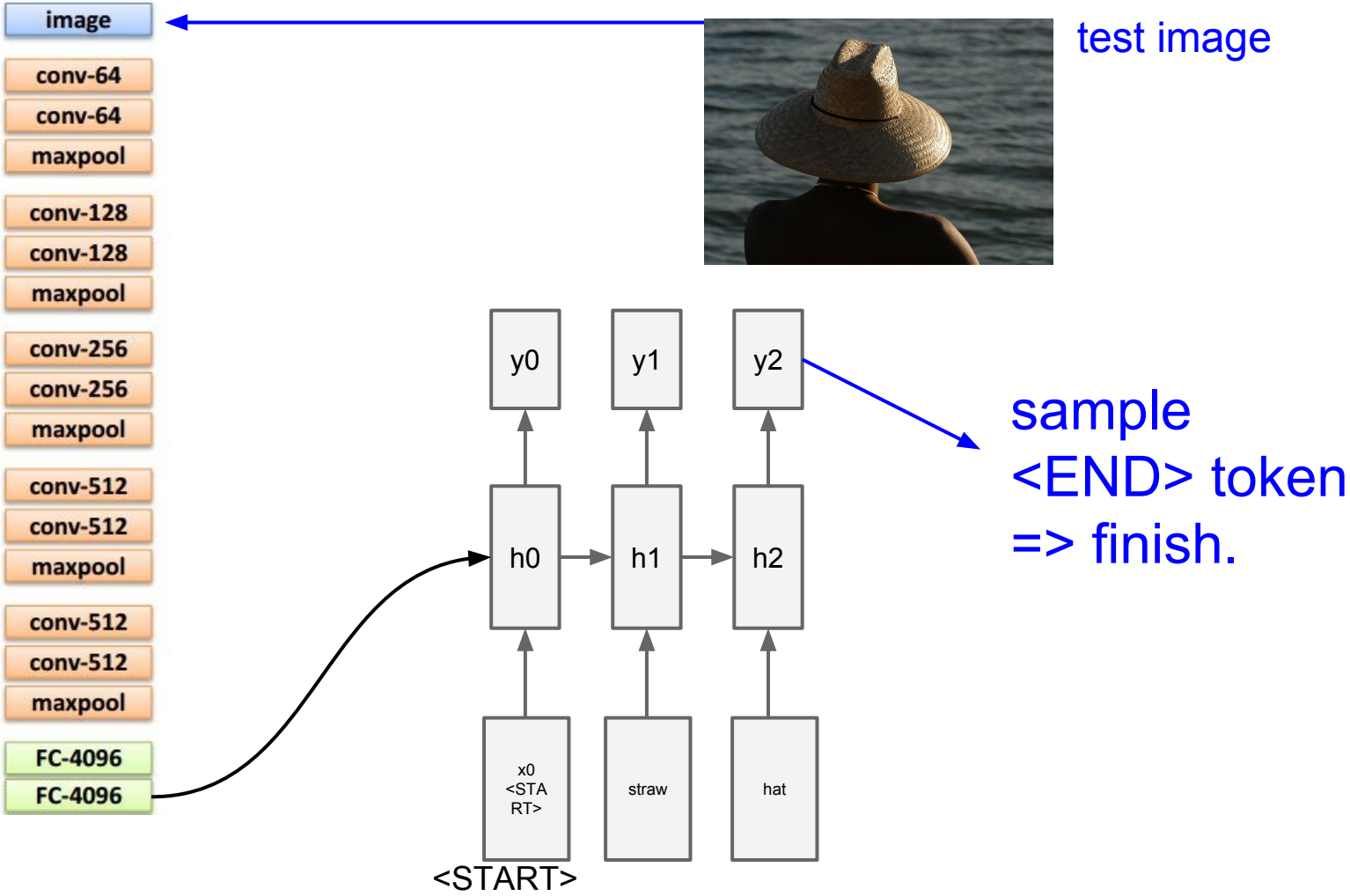
image
conv-64
conv-64
maxpool
conv-128
conv-128
maxpool
conv-256
conv-256
maxpool
conv-512
conv-512
maxpool
conv-512
conv-512
maxpool
FC-4096
FC-4096
test image
y0
y1
y2
h0
h1
h2
x0
<STA
RT>
straw
hat
<START>
sample
<END> token
=> finish.

Image Captioning: Example Results

Captions generated using neuraltalk2
All images are CC0 Public domain:
cat suitcase, cat tree, dog, bear, surfers, tennis, giraffe, motorcycle

A cat sitting on a suitcase on the floor

A cat is sitting on a tree branch

A dog is running in the grass with a frisbee

A white teddy bear sitting in the grass

Two people walking on the beach with surfboards

A tennis player in action on the court

Two giraffes standing in a grassy field

A man riding a dirt bike on a dirt track

Image Captioning: Failure Cases

Captions generated using neuraltalk2
All images are CC0 Public domain: fur coat, handstand, spider web, baseball

A woman is holding a cat in her hand

A person holding a computer mouse on a desk

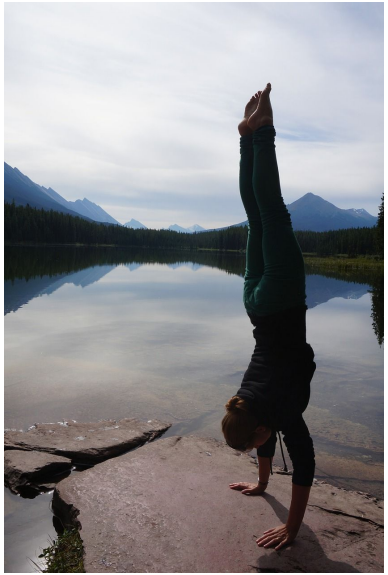

A woman standing on a beach holding a surfboard

A bird is perched on a tree branch

A man in a baseball uniform throwing a ball

Image Captioning with Attention

RNN focuses its attention at a different spatial location when generating each word

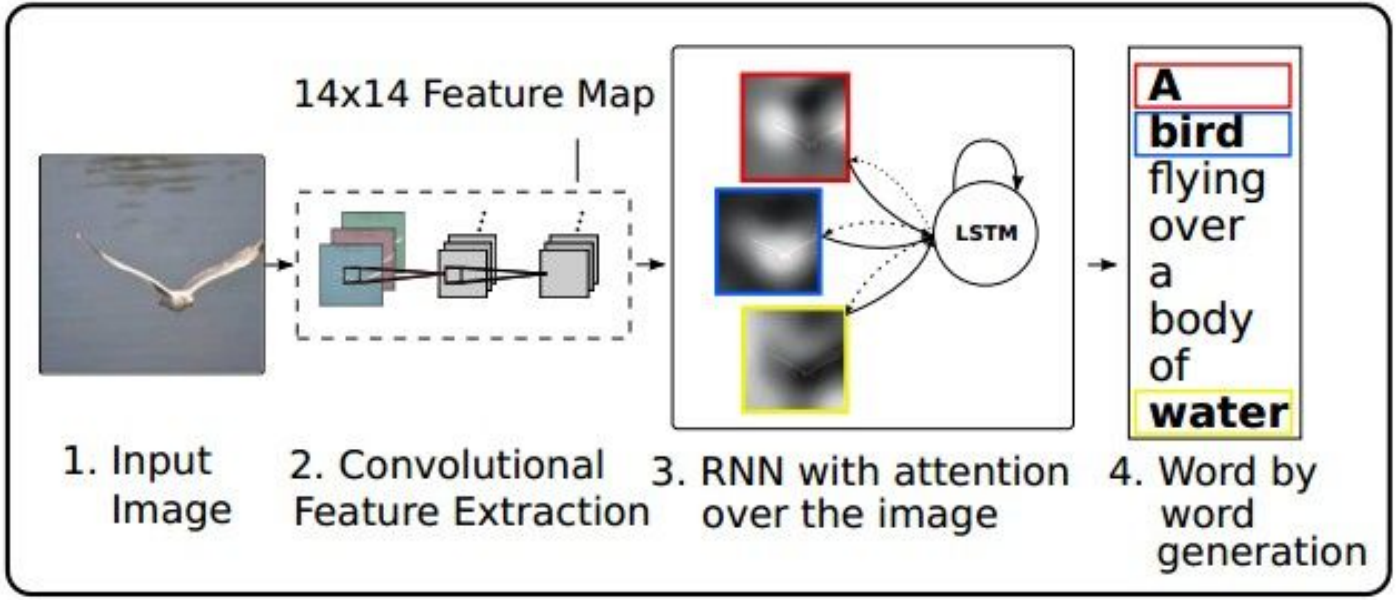

Xu et al, "Show, Attend, and Tell: Neural Image Caption Generation with Visual Attention", ICML 2015

Image Captioning with Attention

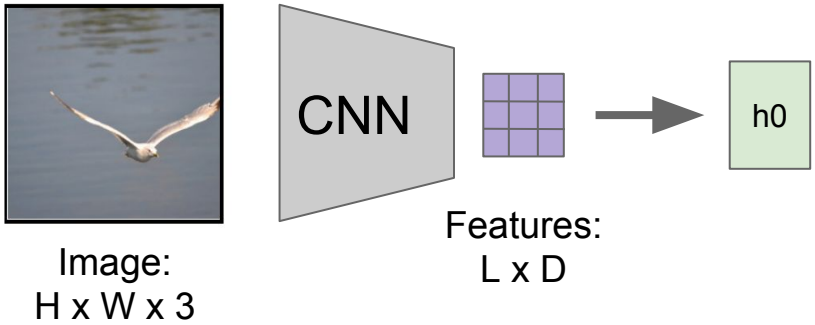

Xu et al, “Show, Attend and Tell: Neural Image Caption Generation with Visual Attention”, ICML 2015

Image Captioning with Attention

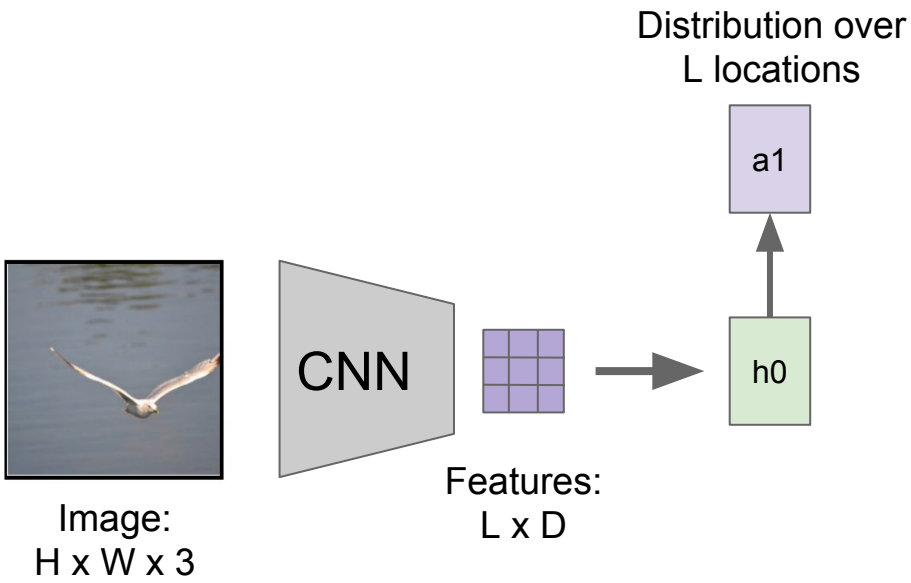

Xu et al, “Show, Attend and Tell: Neural Image Caption Generation with Visual Attention”, ICML 2015

Image Captioning with Attention

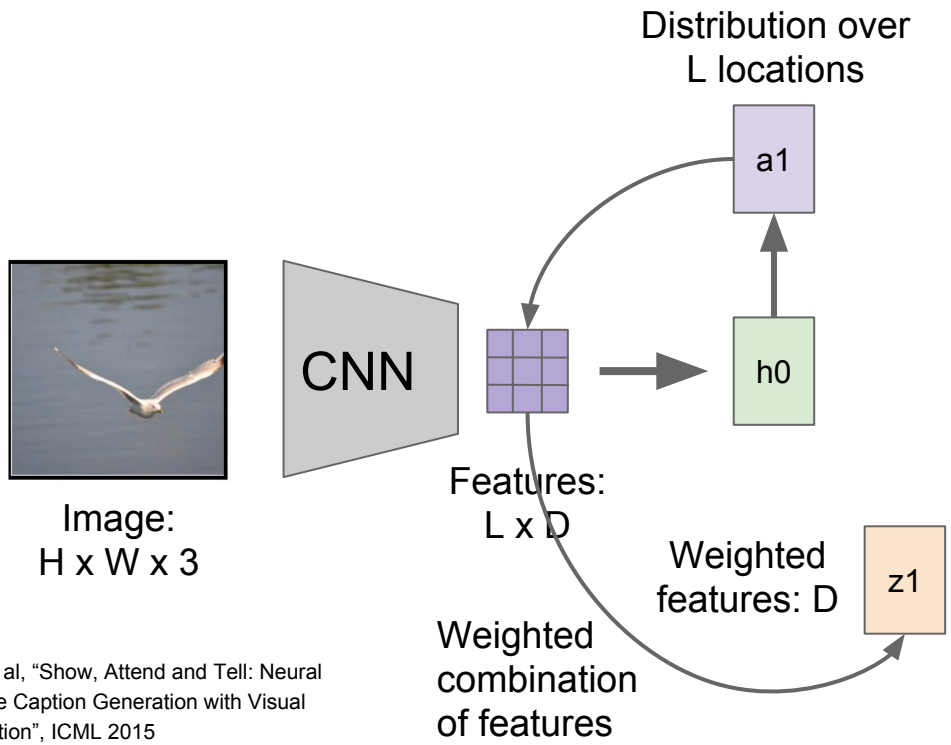

$$z = \sum_{i=1}^{L} p_i v_i$$

Xu et al, "Show, Attend and Tell: Neural Image Caption Generation with Visual Attention", ICML 2015

Image Captioning with Attention

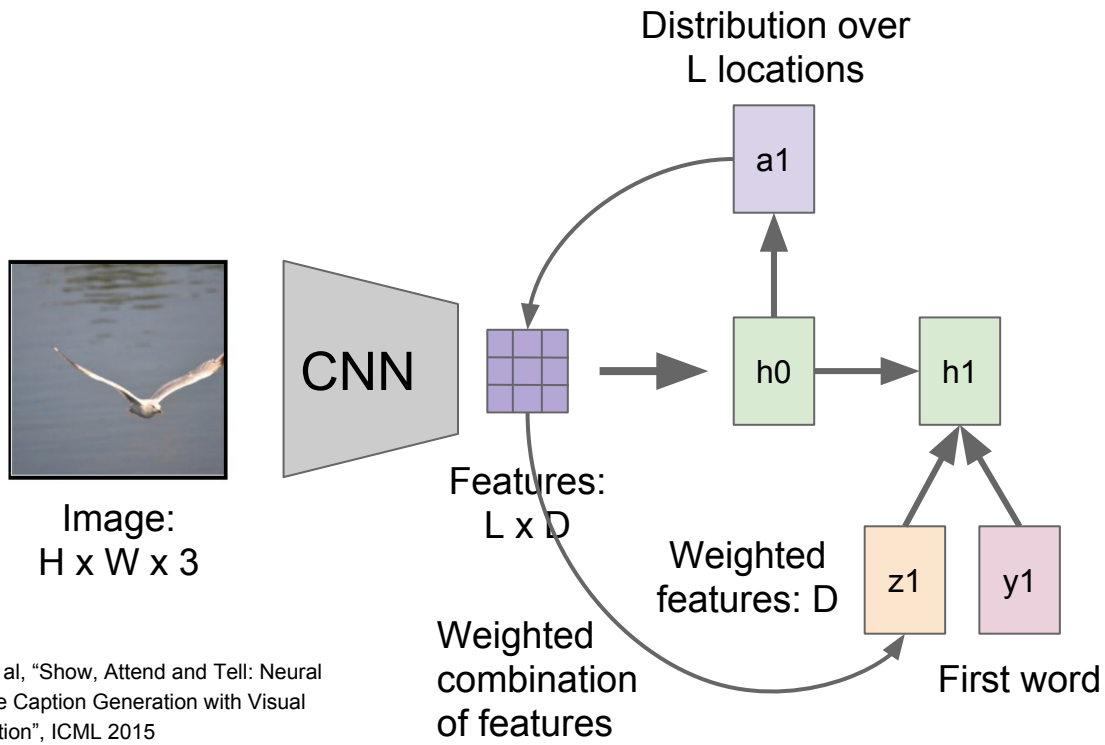

Xu et al, "Show, Attend and Tell: Neural Image Caption Generation with Visual Attention", ICML 2015

Image Captioning with Attention

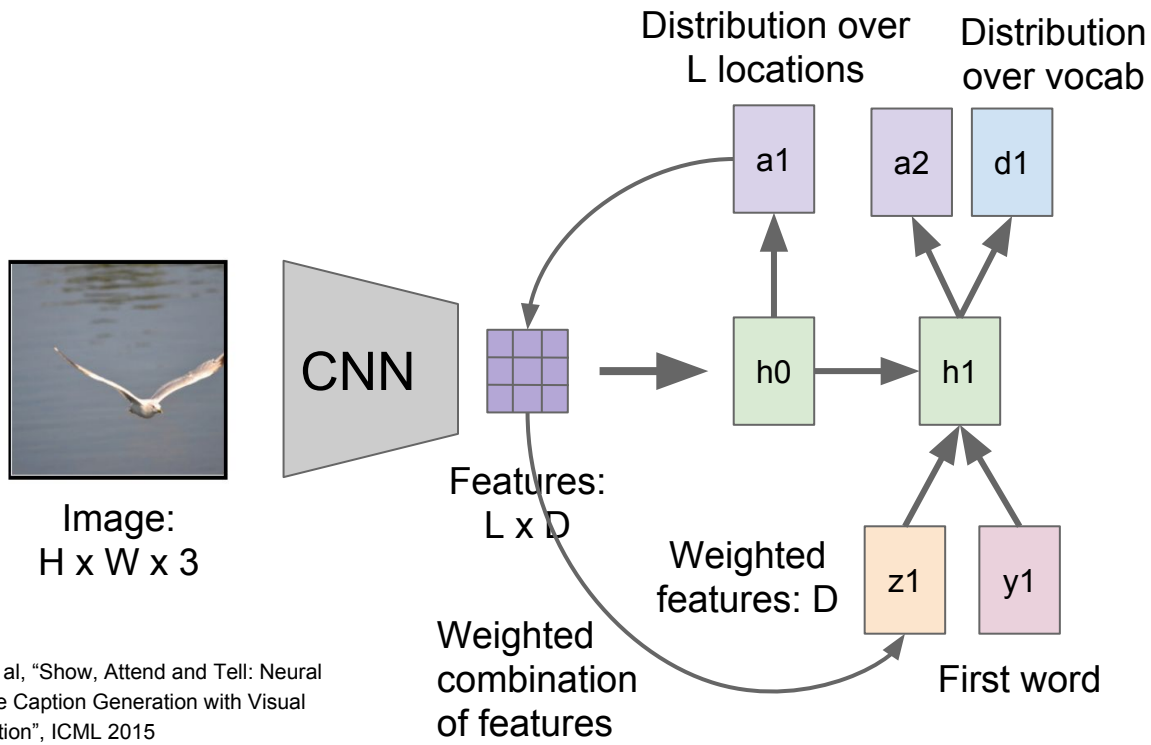

Xu et al, "Show, Attend and Tell: Neural Image Caption Generation with Visual Attention", ICML 2015

Image Captioning with Attention

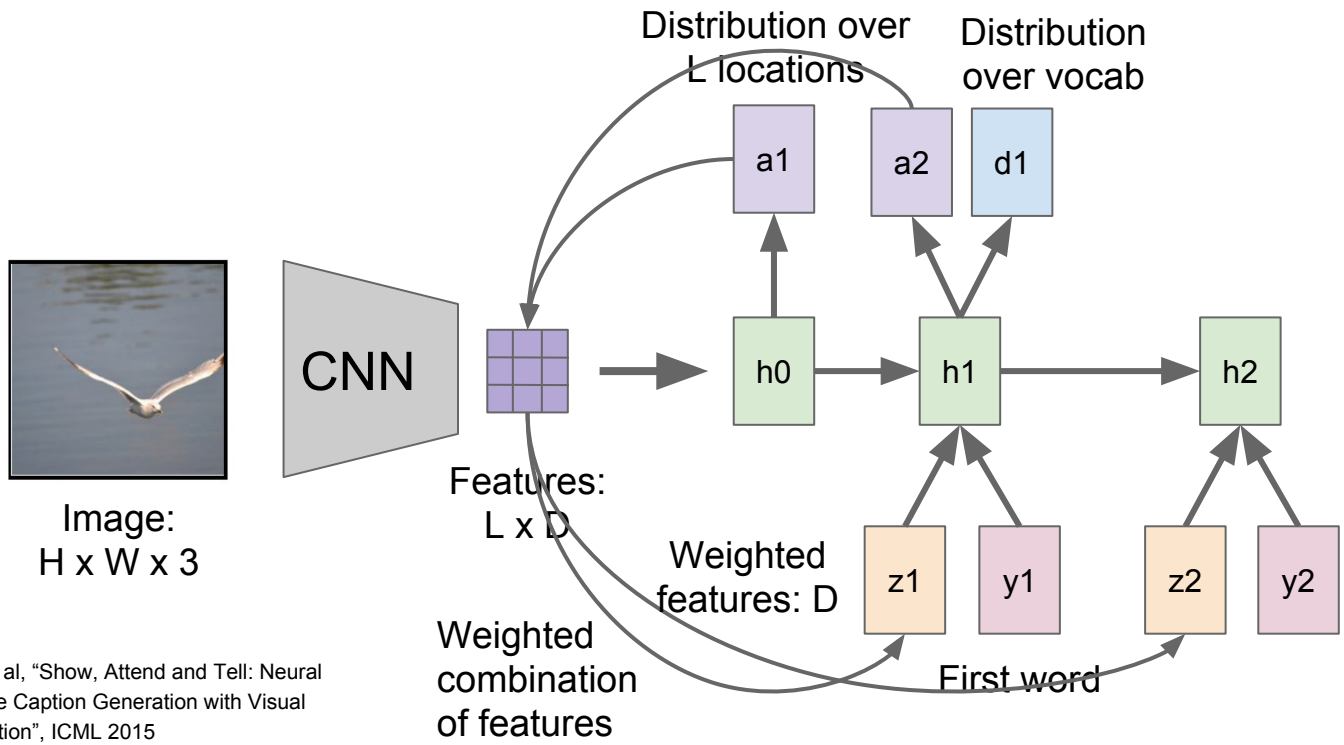

Xu et al, "Show, Attend and Tell: Neural Image Caption Generation with Visual Attention", ICML 2015

Image Captioning with Attention

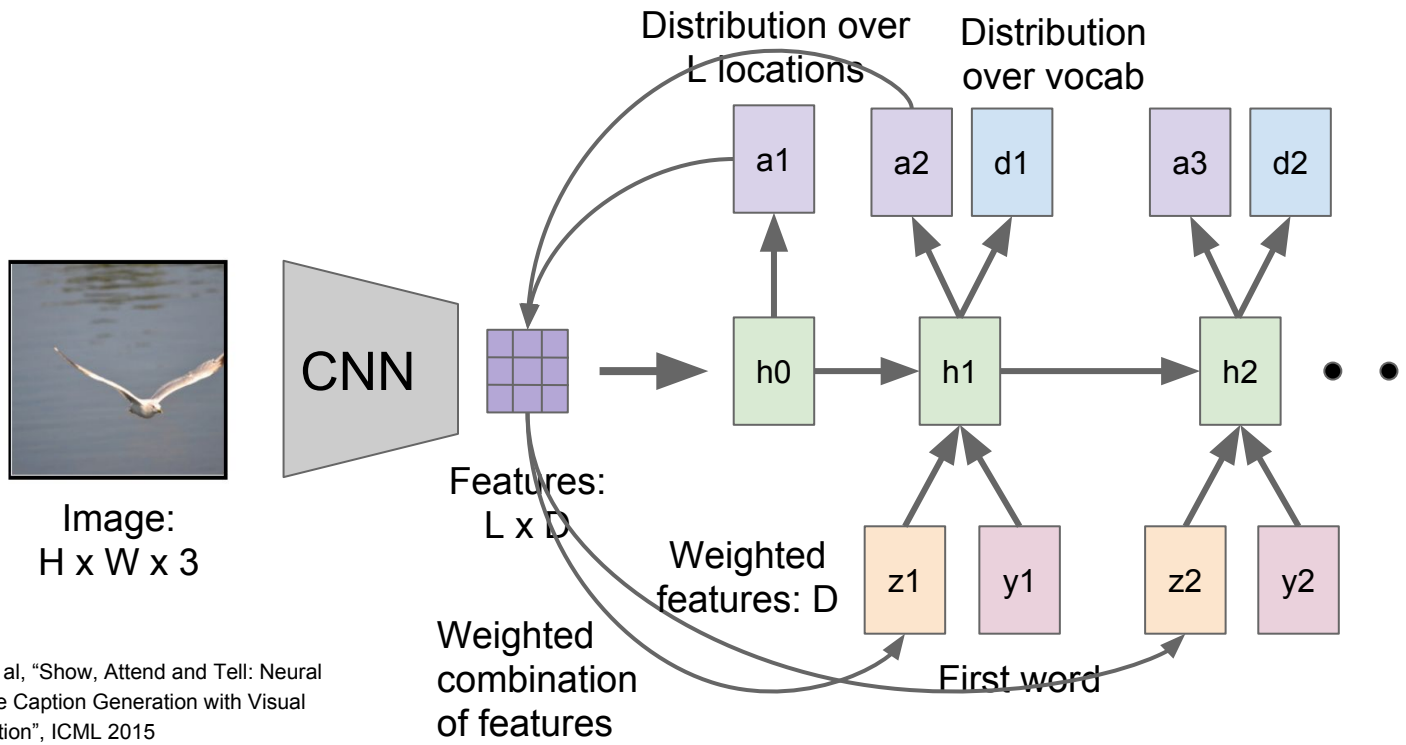

Xu et al, "Show, Attend and Tell: Neural Image Caption Generation with Visual Attention", ICML 2015

Image Captioning with Attention

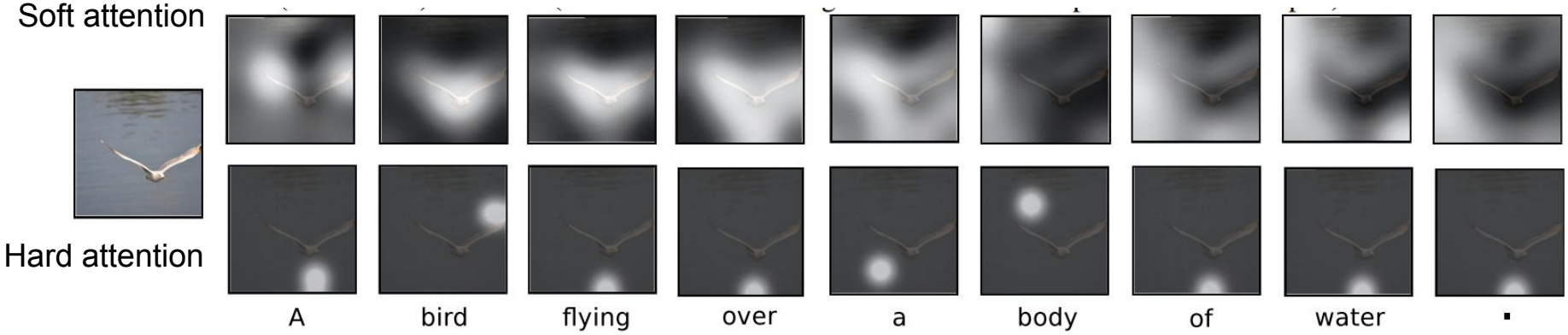

Xu et al, “Show, Attend, and Tell: Neural Image Caption Generation with Visual Attention”, ICML 2015

Image Captioning with Attention

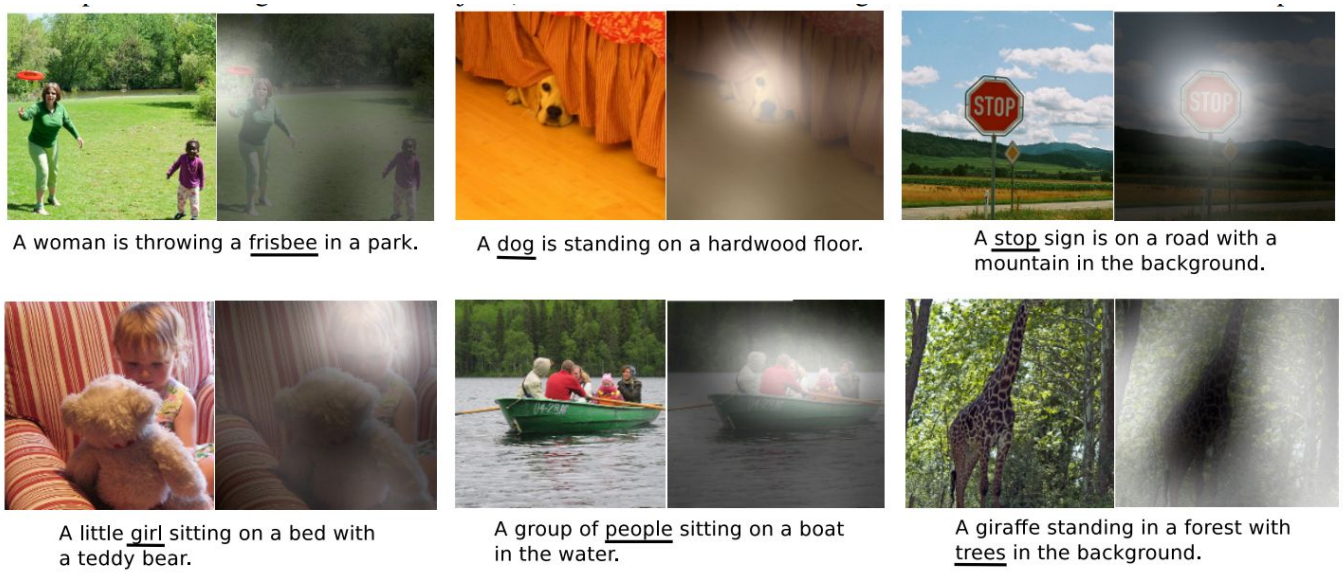

Xu et al, “Show, Attend, and Tell: Neural Image Caption Generation with Visual Attention”, ICML 2015

Visual Question Answering

Q: What endangered animal is featured on the truck?

A: **A bald eagle.**
A: A sparrow.
A: A humming bird.
A: A raven.

Q: Where will the driver go if turning right?

A: **Onto 24 ¾ Rd.**
A: Onto 25 ¾ Rd.
A: Onto 23 ¾ Rd.
A: Onto Main Street.

Q: When was the picture taken?

A: **During a wedding.**
A: During a bar mitzvah.
A: During a funeral.
A: During a Sunday church service

Q: Who is under the umbrella?

A: **Two women.**
A: A child.
A: An old man.
A: A husband and a wife.

Agrawal et al, "VQA: Visual Question Answering", ICCV 2015
Zhu et al, "Visual 7W: Grounded Question Answering in Images", CVPR 2016

Visual Question Answering: RNNs with Attention

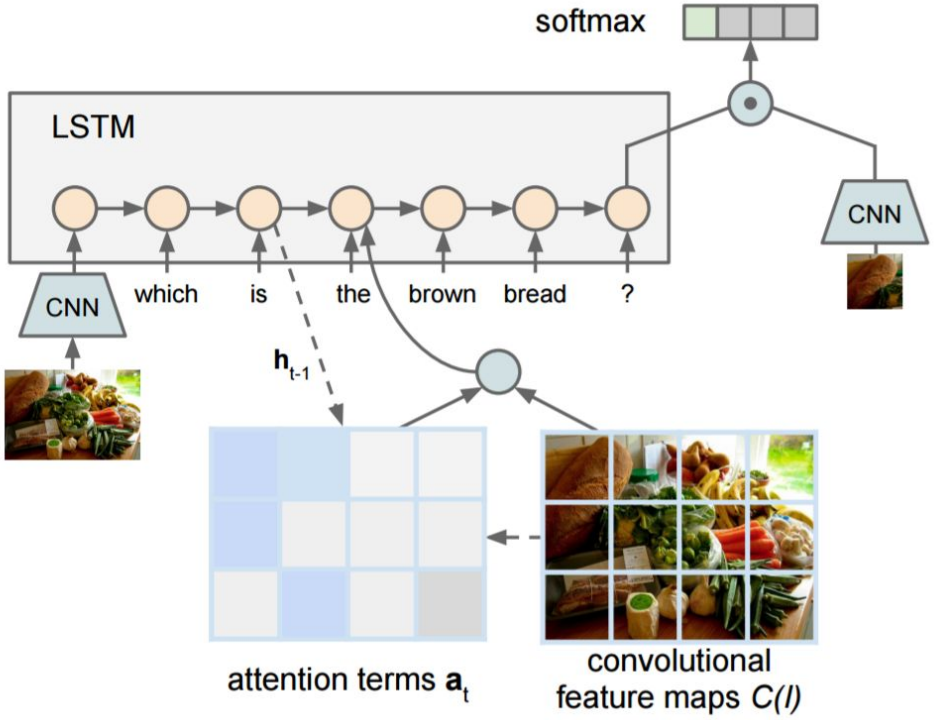

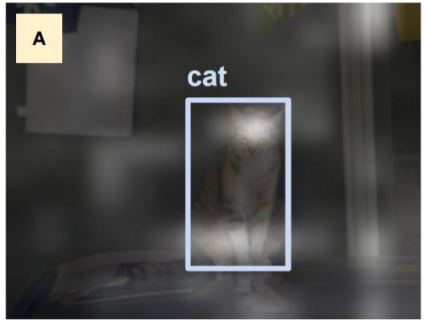

What kind of animal is in the photo?
A **cat**.

Why is the person holding a knife?
To cut the **cake** with.

Zhu et al, "Visual 7W: Grounded Question Answering in Images", CVPR 2016

Multilayer RNNs

$$h_t^l = \tanh W^l \begin{pmatrix} h_t^{l-1} \\ h_{t-1}^l \end{pmatrix}$$

$h \in \mathbb{R}^n$ $\quad W^l \ [n \times 2n]$

LSTM:

$W^l \ [4n \times 2n]$

$$\begin{pmatrix} i \\ f \\ o \\ g \end{pmatrix} = \begin{pmatrix} \text{sigm} \\ \text{sigm} \\ \text{sigm} \\ \tanh \end{pmatrix} W^l \begin{pmatrix} h_t^{l-1} \\ h_{t-1}^l \end{pmatrix}$$

$$c_t^l = f \odot c_{t-1}^l + i \odot g$$

$$h_t^l = o \odot \tanh(c_t^l)$$

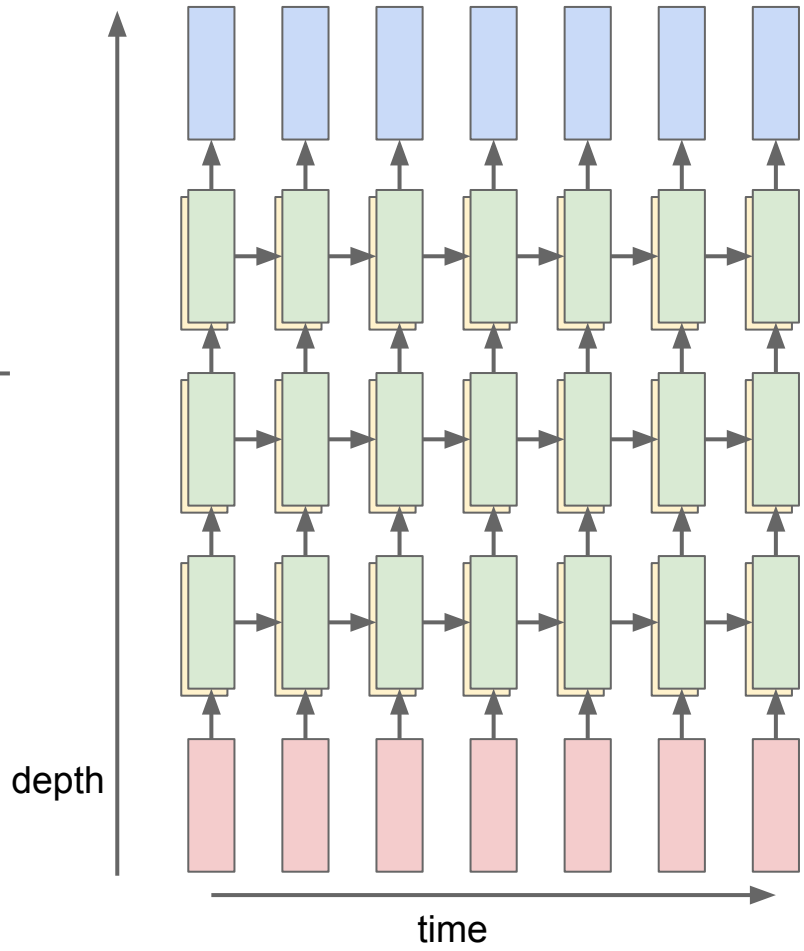

Vanilla RNN Gradient Flow

Bengio et al, "Learning long-term dependencies with gradient descent is difficult", IEEE Transactions on Neural Networks, 1994
Pascanu et al, "On the difficulty of training recurrent neural networks", ICML 2013

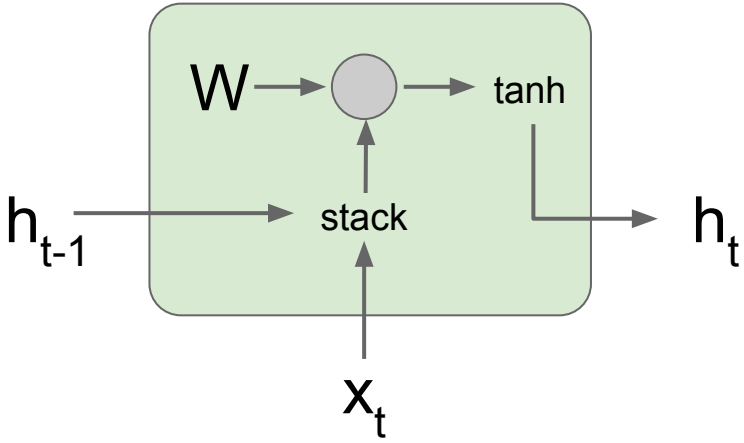

$$
\begin{aligned}
h_t &= \tanh(W_{hh}h_{t-1} + W_{xh}x_t) \\
&= \tanh\left(\begin{pmatrix} W_{hh} & W_{hx} \end{pmatrix} \begin{pmatrix} h_{t-1} \\ x_t \end{pmatrix}\right) \\
&= \tanh\left(W \begin{pmatrix} h_{t-1} \\ x_t \end{pmatrix}\right)
\end{aligned}
$$

Vanilla RNN Gradient Flow

Bengio et al, "Learning long-term dependencies with gradient descent is difficult", IEEE Transactions on Neural Networks, 1994
Pascanu et al, "On the difficulty of training recurrent neural networks", ICML 2013

Backpropagation from h_t to h_{t-1} multiplies by W (actually W_{hh}^T)

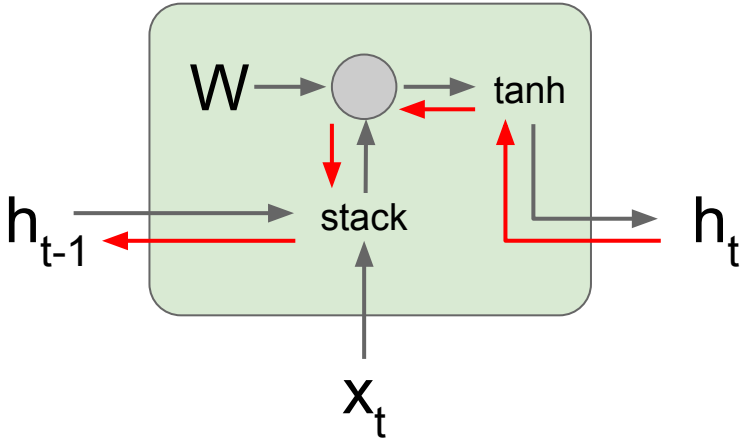

$$
\begin{aligned}
h_t &= \tanh(W_{hh}h_{t-1} + W_{xh}x_t) \\
&= \tanh\left(\begin{pmatrix} W_{hh} & W_{hx} \end{pmatrix}\begin{pmatrix} h_{t-1} \\ x_t \end{pmatrix}\right) \\
&= \tanh\left(W\begin{pmatrix} h_{t-1} \\ x_t \end{pmatrix}\right)
\end{aligned}
$$

Vanilla RNN Gradient Flow

Bengio et al, "Learning long-term dependencies with gradient descent is difficult", IEEE Transactions on Neural Networks, 1994
Pascanu et al, "On the difficulty of training recurrent neural networks", ICML 2013

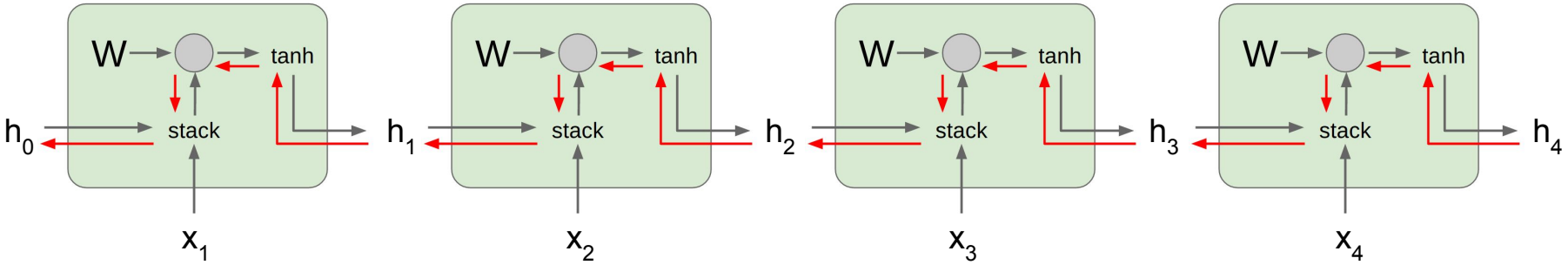

Computing gradient of h_0 involves many factors of W (and repeated tanh)

Vanilla RNN Gradient Flow

Bengio et al, "Learning long-term dependencies with gradient descent is difficult", IEEE Transactions on Neural Networks, 1994
Pascanu et al, "On the difficulty of training recurrent neural networks", ICML 2013

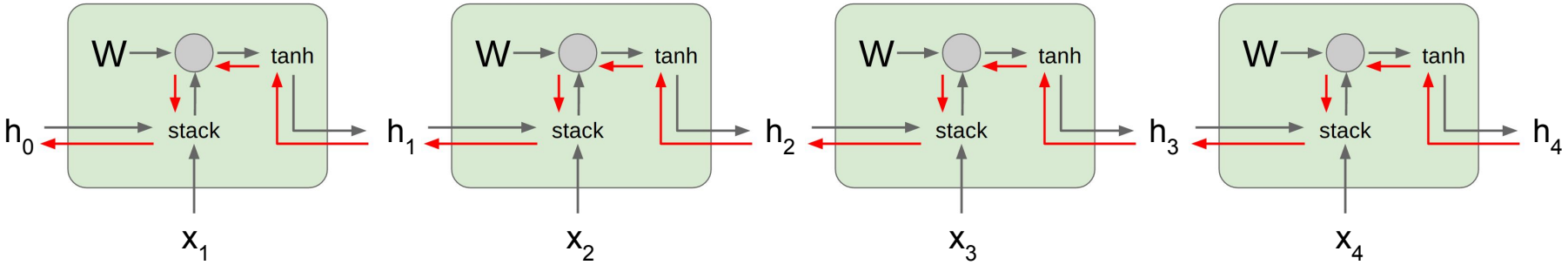

Computing gradient of h_0 involves many factors of W (and repeated tanh)

Largest singular value > 1:
Exploding gradients

Largest singular value < 1:
Vanishing gradients

Vanilla RNN Gradient Flow

Bengio et al, "Learning long-term dependencies with gradient descent is difficult", IEEE Transactions on Neural Networks, 1994
Pascanu et al, "On the difficulty of training recurrent neural networks", ICML 2013

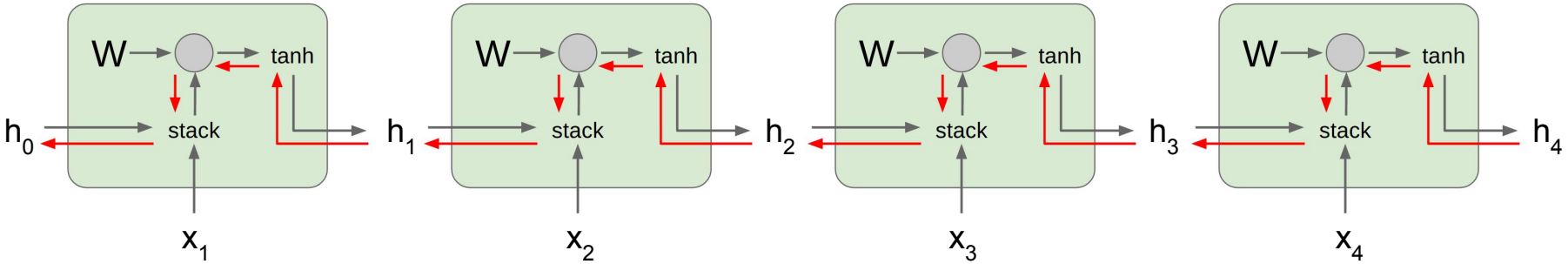

Computing gradient of h_0 involves many factors of W (and repeated tanh)

Largest singular value > 1: **Exploding gradients**

→ **Gradient clipping**: Scale gradient if its norm is too big

```
grad_norm = np.sum(grad * grad)
if grad_norm > threshold:
  grad *= (threshold / grad_norm)
```

Largest singular value < 1: **Vanishing gradients**

Vanilla RNN Gradient Flow

Bengio et al, "Learning long-term dependencies with gradient descent is difficult", IEEE Transactions on Neural Networks, 1994
Pascanu et al, "On the difficulty of training recurrent neural networks", ICML 2013

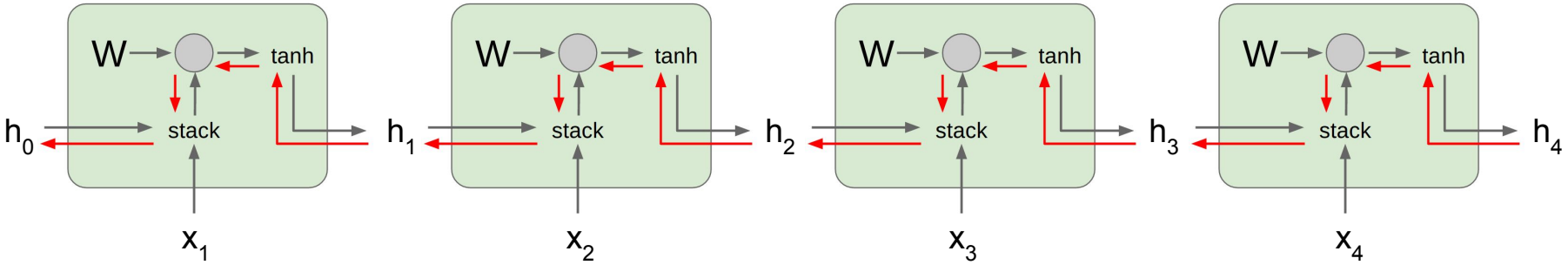

Computing gradient of h_0 involves many factors of W (and repeated tanh)

Largest singular value > 1:
Exploding gradients

Largest singular value < 1:
Vanishing gradients

→ Change RNN architecture

Long Short Term Memory (LSTM)

Vanilla RNN

$$h_t = \tanh\left(W\begin{pmatrix} h_{t-1} \\ x_t \end{pmatrix}\right)$$

LSTM

$$\begin{pmatrix} i \\ f \\ o \\ g \end{pmatrix} = \begin{pmatrix} \sigma \\ \sigma \\ \sigma \\ \tanh \end{pmatrix} W \begin{pmatrix} h_{t-1} \\ x_t \end{pmatrix}$$

$$c_t = f \odot c_{t-1} + i \odot g$$

$$h_t = o \odot \tanh(c_t)$$

Hochreiter and Schmidhuber, “Long Short Term Memory”, Neural Computation 1997

Long Short Term Memory (LSTM)

[Hochreiter et al., 1997]

i: Input gate, whether to write to cell
f: Forget gate, Whether to erase cell
o: Output gate, How much to reveal cell
g: Gate gate (?), How much to write to cell

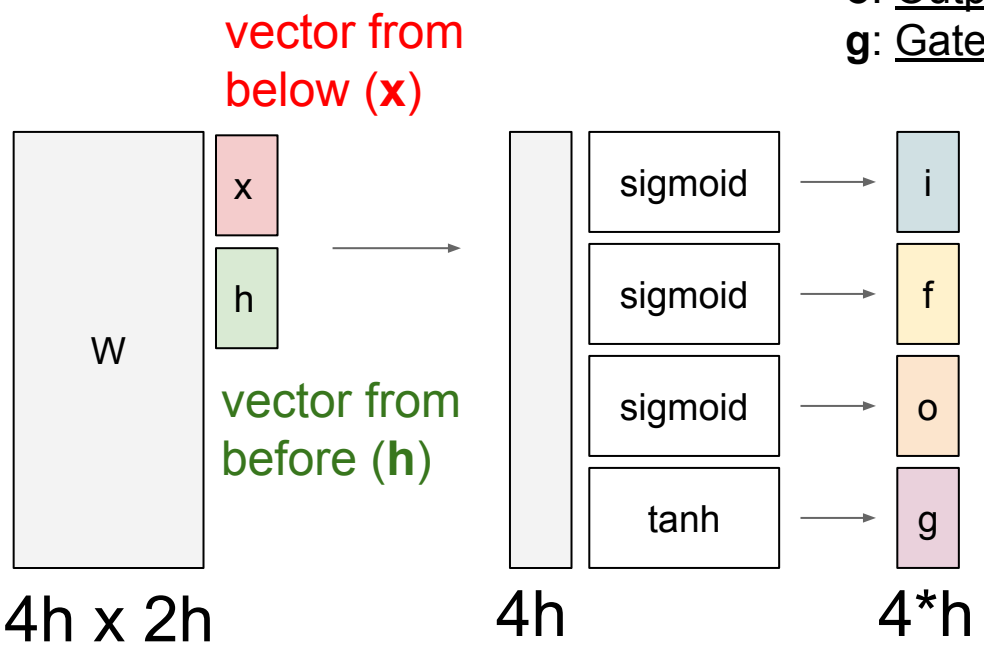

$$\begin{pmatrix} i \\ f \\ o \\ g \end{pmatrix} = \begin{pmatrix} \sigma \\ \sigma \\ \sigma \\ \tanh \end{pmatrix} W \begin{pmatrix} h_{t-1} \\ x_t \end{pmatrix}$$

$$c_t = f \odot c_{t-1} + i \odot g$$

$$h_t = o \odot \tanh(c_t)$$

Long Short Term Memory (LSTM)

[Hochreiter et al., 1997]

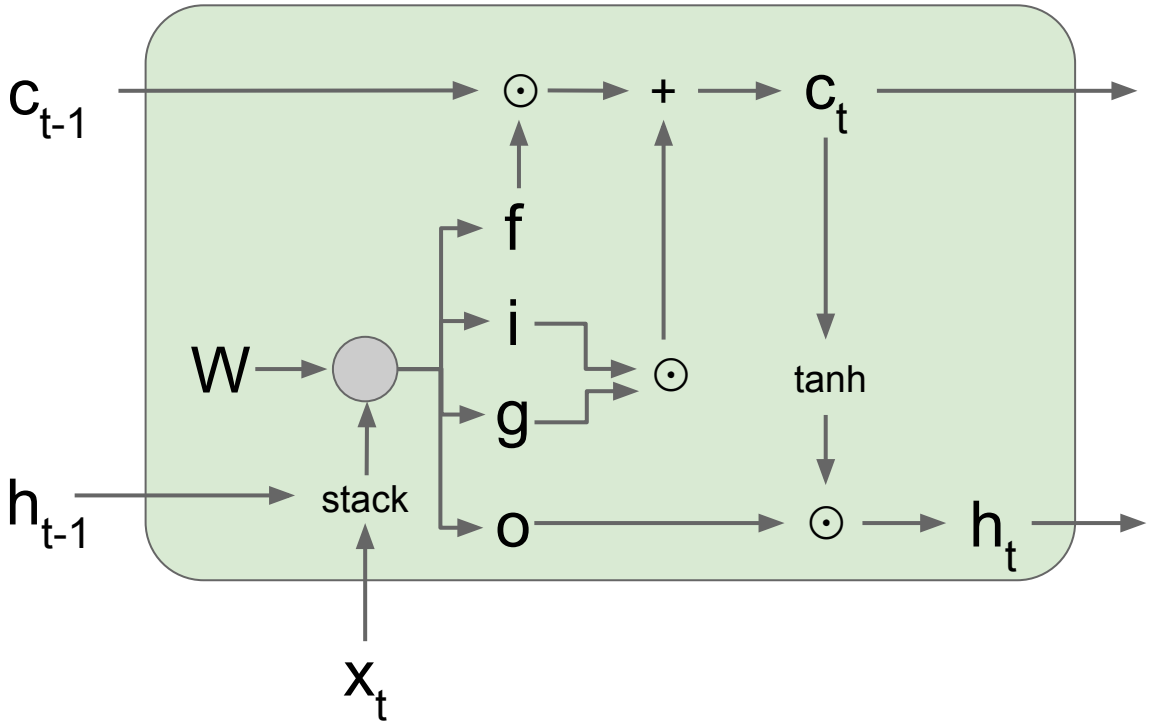

$$\begin{pmatrix} i \\ f \\ o \\ g \end{pmatrix} = \begin{pmatrix} \sigma \\ \sigma \\ \sigma \\ \tanh \end{pmatrix} W \begin{pmatrix} h_{t-1} \\ x_t \end{pmatrix}$$

$$c_t = f \odot c_{t-1} + i \odot g$$

$$h_t = o \odot \tanh(c_t)$$

Long Short Term Memory (LSTM): Gradient Flow

[Hochreiter et al., 1997]

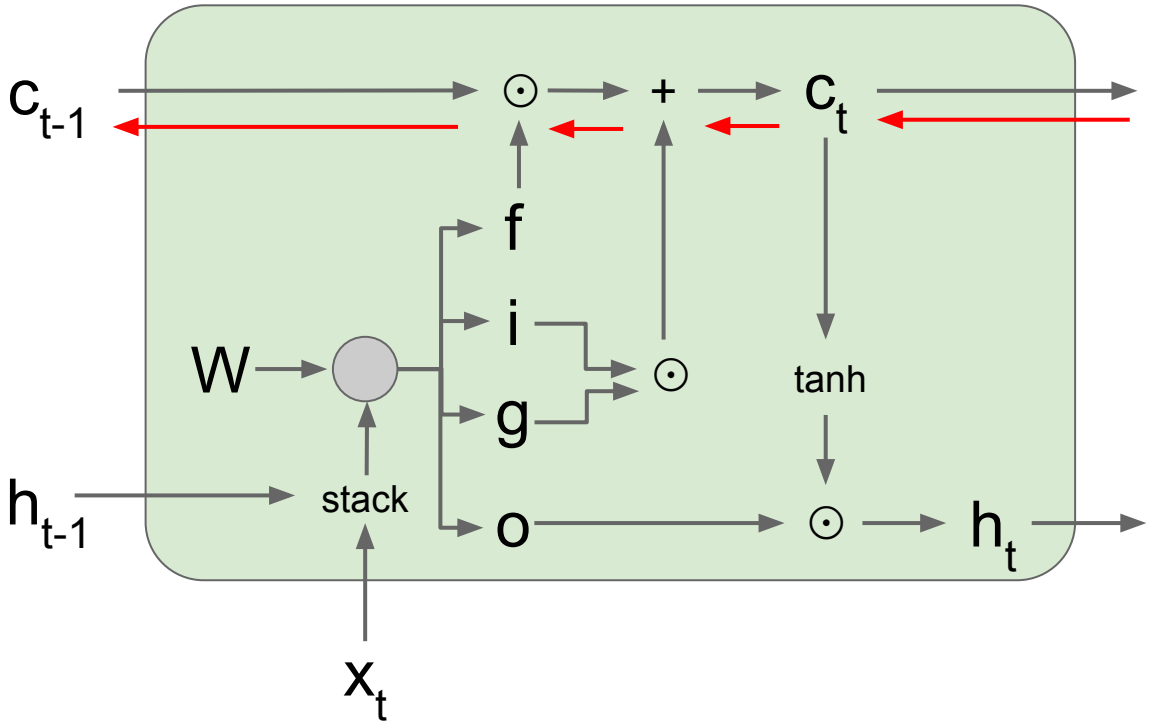

Backpropagation from c_t to c_{t-1} only elementwise multiplication by f, no matrix multiply by W

$$\begin{pmatrix} i \\ f \\ o \\ g \end{pmatrix} = \begin{pmatrix} \sigma \\ \sigma \\ \sigma \\ \tanh \end{pmatrix} W \begin{pmatrix} h_{t-1} \\ x_t \end{pmatrix}$$

$$c_t = f \odot c_{t-1} + i \odot g$$

$$h_t = o \odot \tanh(c_t)$$

Long Short Term Memory (LSTM): Gradient Flow

[Hochreiter et al., 1997]

Uninterrupted gradient flow!

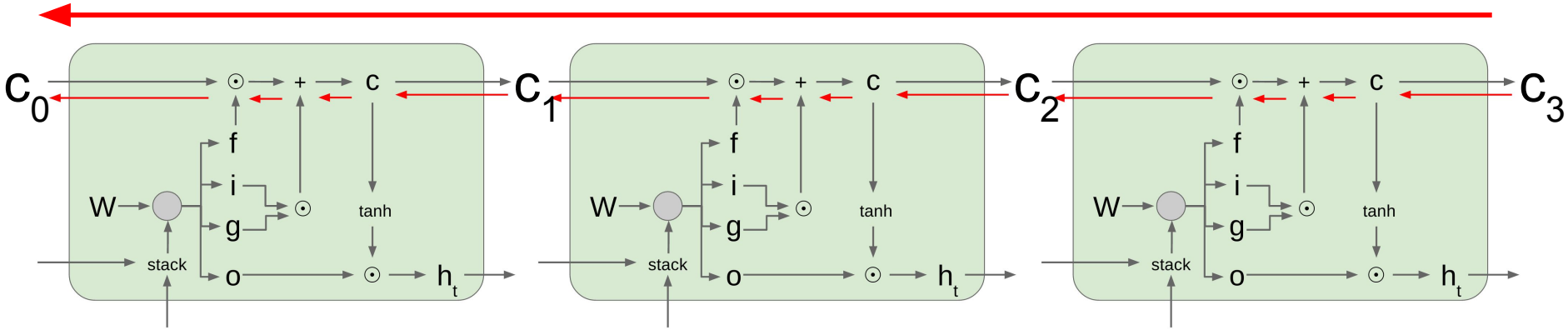

Long Short Term Memory (LSTM): Gradient Flow

[Hochreiter et al., 1997]

Uninterrupted gradient flow!

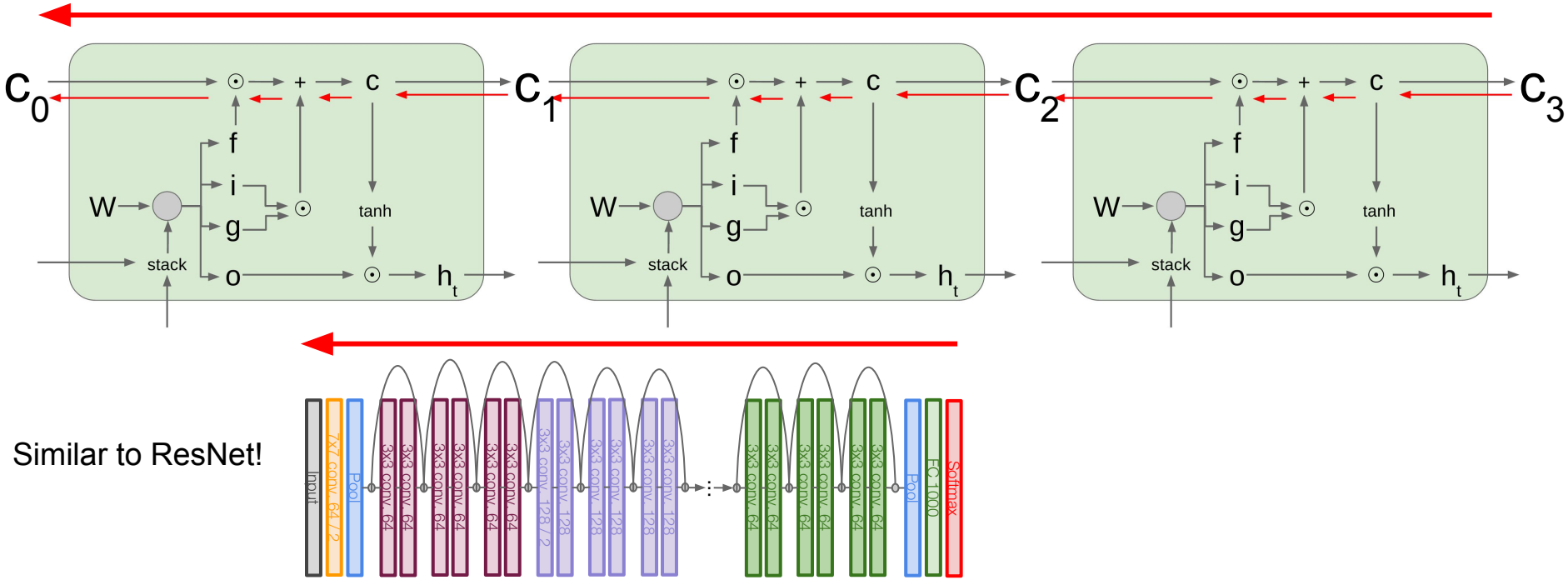

Long Short Term Memory (LSTM): Gradient Flow

[Hochreiter et al., 1997]

Uninterrupted gradient flow!

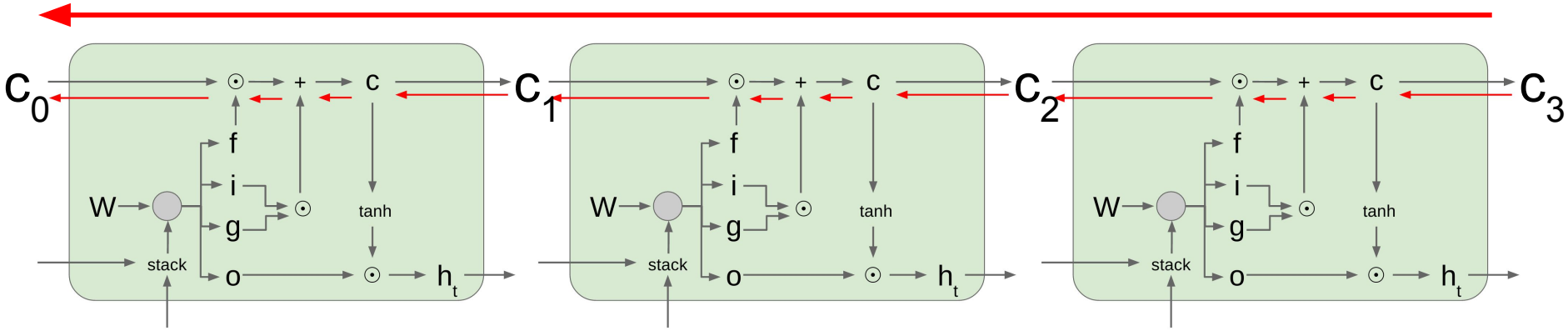

Similar to ResNet!

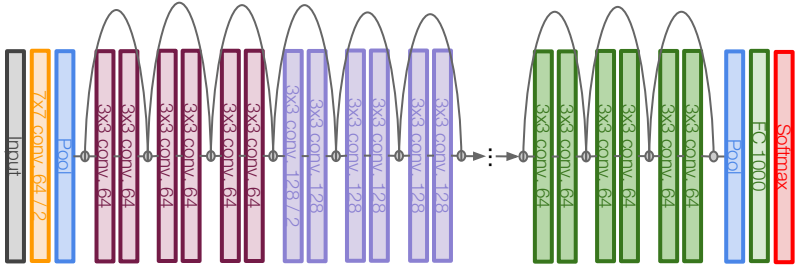

In between:
Highway Networks

$$g = T(x, W_T)$$

$$y = g \odot H(x, W_H) + (1 - g) \odot x$$

Srivastava et al, "Highway Networks", ICML DL Workshop 2015

Other RNN Variants

GRU [*Learning phrase representations using rnn encoder-decoder for statistical machine translation*, Cho et al. 2014]

$$r_t = \sigma(W_{xr}x_t + W_{hr}h_{t-1} + b_r)$$
$$z_t = \sigma(W_{xz}x_t + W_{hz}h_{t-1} + b_z)$$
$$\tilde{h}_t = \tanh(W_{xh}x_t + W_{hh}(r_t \odot h_{t-1}) + b_h)$$
$$h_t = z_t \odot h_{t-1} + (1 - z_t) \odot \tilde{h}_t$$

[*LSTM: A Search Space Odyssey*, Greff et al., 2015]

[*An Empirical Exploration of Recurrent Network Architectures*, Jozefowicz et al., 2015]

MUT1:

$$\begin{aligned} z &= \mathrm{sigm}(W_{\mathrm{xz}}x_t + b_{\mathrm{z}}) \\ r &= \mathrm{sigm}(W_{\mathrm{xr}}x_t + W_{\mathrm{hr}}h_t + b_{\mathrm{r}}) \\ h_{t+1} &= \tanh(W_{\mathrm{hh}}(r \odot h_t) + \tanh(x_t) + b_{\mathrm{h}}) \odot z \\ &+ h_t \odot (1 - z) \end{aligned}$$

MUT2:

$$\begin{aligned} z &= \mathrm{sigm}(W_{\mathrm{xz}}x_t + W_{\mathrm{hz}}h_t + b_{\mathrm{z}}) \\ r &= \mathrm{sigm}(x_t + W_{\mathrm{hr}}h_t + b_{\mathrm{r}}) \\ h_{t+1} &= \tanh(W_{\mathrm{hh}}(r \odot h_t) + W_{xh}x_t + b_{\mathrm{h}}) \odot z \\ &+ h_t \odot (1 - z) \end{aligned}$$

MUT3:

$$\begin{aligned} z &= \mathrm{sigm}(W_{\mathrm{xz}}x_t + W_{\mathrm{hz}}\tanh(h_t) + b_{\mathrm{z}}) \\ r &= \mathrm{sigm}(W_{\mathrm{xr}}x_t + W_{\mathrm{hr}}h_t + b_{\mathrm{r}}) \\ h_{t+1} &= \tanh(W_{\mathrm{hh}}(r \odot h_t) + W_{xh}x_t + b_{\mathrm{h}}) \odot z \\ &+ h_t \odot (1 - z) \end{aligned}$$

Summary

- RNNs allow a lot of flexibility in architecture design
- Vanilla RNNs are simple but don't work very well
- Common to use LSTM or GRU: their additive interactions improve gradient flow
- Backward flow of gradients in RNN can explode or vanish. Exploding is controlled with gradient clipping. Vanishing is controlled with additive interactions (LSTM)
- Better/simpler architectures are a hot topic of current research
- Better understanding (both theoretical and empirical) is needed.

Next time: Midterm!